en

remeha



Installation, User and Service Manual

Reversible monobloc air-to-water heat pump

Eria Tower Ace MB

Eria MB EL

Dear Customer,

Thank you very much for buying this appliance.

Please read through the manual carefully before using the product, and keep it in a safe place for later reference. In order to ensure continued safe and efficient operation we recommend that the product is serviced regularly. Our service and customer service organisation can assist with this.

We hope you enjoy years of problem-free operation with the product.

Contents

1 Safety instructions and recommendations . . . 7
1.1 Safety . . . 7
1.2 General instructions . . . 8
1.3 Electrical wiring . . . 9
1.4 Domestic water safety . . . 9
1.5 Water connections . . . 10
1.6 Installation location . . . 10
1.7 Recommendations . . . 10
1.8 Maintenance and repair work . . . 11
1.9 Liabilities . . . 11

2 Standard delivery . . . 11

3 Symbols used . . . 12
3.1 Symbols used in the manual . . . 12
3.2 Symbols used on the appliance . . . 12
3.3 Symbols used on the data plate . . . 13

4 Technical specifications . . . 13
4.1 Homologations . . . 13
4.1.1 Directives . . . 13
4.1.2 Factory test . . . 13
4.1.3 **Bluetooth®** wireless technology . . . 14
4.2 Technical data . . . 14
4.2.1 Compatible heating devices . . . 14
4.2.2 Minimum volume for operation of the heat pump . . . 14
4.2.3 Radio-electrical specifications for the indoor unit . . . 14
4.2.4 Heat pump . . . 14
4.2.5 Combination heaters with medium-temperature heat pump . . . 16
4.2.6 Domestic hot water tank . . . 19
4.2.7 Sensor specifications . . . 19
4.2.8 Circulating pump . . . 20
4.3 Dimensions and connections of the indoor unit . . . 21
4.4 Electrical diagram . . . 21

5 Description of the product . . . 24
5.1 Main components . . . 24
5.2 Description of the user interface . . . 25
5.2.1 Description of the interface . . . 25
5.2.2 Description of the standby screen . . . 25
5.2.3 Description of status icons . . . 25
5.2.4 Description of the home screen . . . 26
5.2.5 Description of the Zone display . . . 26
5.2.6 Description of the carousel . . . 26

6 Installation . . . 27
6.1 Preparation . . . 27
6.2 Installation regulations . . . 27
6.3 Outdoor unit installation regulations . . . 27
6.4 Positioning the indoor unit . . . 27
6.4.1 Location of the data plate on the indoor module . . . 27
6.4.2 Bluetooth® label . . . 27
6.4.3 Allowing sufficient space for the indoor module . . . 28
6.4.4 Choosing the location for the heat pump . . . 28
6.4.5 Levelling the indoor unit . . . 28
6.5 Removing the top panel and the front panels . . . 29
6.6 Reversing the opening direction of the user interface door . . . 30
6.7 Putting the outdoor unit in place: precautions . . . 32
6.8 Hydraulic connections . . . 33
6.8.1 Connections . . . 33
6.8.2 Special precautions for connecting the heating circuit . . . 35
6.8.3 Special precautions for the connection of the domestic hot water circuit . . . 36
6.8.4 Connecting the safety valve drain pipe . . . 37

6.9 Electrical connections . . . 37
6.9.1 Recommendations . . . 37
6.9.2 Electrical sizing . . . 38
6.9.3 Accessing the PCBs . . . 41
6.9.4 Routing the cables . . . 42
6.9.5 Description of the connection terminal blocks . . . 43
6.9.6 Connecting the outdoor unit bus . . . 44
6.9.7 Connecting the outdoor temperature sensor . . . 44
6.9.8 Connecting a backup heater . . . 46
6.10 Filling the system . . . 47
6.10.1 Clean and flush the installation . . . 47
6.10.2 Filling the heating circuit . . . 48
6.10.3 Fill the domestic hot water circuit . . . 49
6.10.4 Filling and flushing the HK72 hydraulic circuit separation kit (glycol kit) . . . 49

7 Commissioning . . . 49
7.1 General . . . 49
7.2 Checklist before commissioning . . . 50
7.2.1 Checking the heating circuit . . . 50
7.2.2 Checking the electrical connections . . . 50
7.3 Commissioning procedure with smartphone . . . 50
7.4 Commissioning procedure without smartphone . . . 51
7.4.1 Resetting the configuration numbers . . . 51
7.4.2 Configuration numbers **CN1** and **CN2** . . . 52
7.5 Setting the flow rate of the direct circuit . . . 52
7.6 Setting the flow rate of the internal second circuit . . . 52
7.7 Final instructions for commissioning . . . 53

8 Settings . . . 54
8.1 Accessing the Installer level . . . 54
8.2 Searching for a parameter or a measured value . . . 54
8.3 Setting the parameters . . . 54
8.3.1 Setting the circuit function . . . 54
8.3.2 Activating/deactivating the Bluetooth® for the appliance . . . 55
8.3.3 Resetting or re-establishing the parameters . . . 55
8.3.4 Configuring the service notification . . . 56
8.4 Configuring the heating circuit . . . 56
8.4.1 Setting the heating curve . . . 56
8.4.2 Configuring the cooling function . . . 56
8.5 Configuring the anti-legionella function . . . 57
8.6 Activating the screed drying function . . . 58
8.7 Configuring a room thermostat . . . 59
8.7.1 Configuring an on/off or modulating thermostat . . . 59
8.7.2 Configuring a thermostat with a heating/cooling control contact . . . 59
8.8 Improving domestic hot water or heating comfort . . . 60
8.9 Configuring sources of energy . . . 61
8.9.1 Configuring the estimated electrical energy consumption function . . . 61
8.9.2 Supplying the heat pump with photovoltaic energy . . . 62
8.9.3 Connecting the installation to a Smart Grid . . . 63
8.10 Resetting or re-establishing the parameters . . . 64
8.10.1 Auto-detecting options and accessories . . . 64
8.10.2 Reset the configuration numbers CN1 and CN2 . . . 64
8.10.3 Reverting to the factory settings . . . 64
8.11 Activate/Deactivate the appliance's Bluetooth® . . . 65
8.12 Counters menu . . . 65
8.13 Reading out measured values . . . 66
8.14 List of parameters . . . 67
8.14.1 Zone 1 or Zone 2 . . . 67
8.14.2 Domestic Hot Water (Domestic Hot Water) . . . 68
8.14.3 Outdoor temperature . . . 68
8.14.4 Air Src Heat Pump . . . 69
8.14.5 ☰ > Bluetooth® . . . 72
8.15 Description of the parameters . . . 72
8.15.1 Running the back-up in heating mode . . . 72
8.15.2 Running the back-up in domestic hot water mode . . . 74
8.15.3 Operation of the switch between heating and production of domestic hot water . . . 74

8.15.4 Operation of the heating curve . . . 75

9 Connecting diagrams and configuration . . . 77
9.1 Installation with one immersion heater and one direct circuit . . . 77
9.1.1 Hydraulic diagram . . . 77
9.1.2 Carrying out the electrical connections and the parameter settings . . . 78
9.2 Installation with one immersion heater and two circuits . . . 79
9.2.1 Hydraulic diagram . . . 79
9.2.2 Carrying out the electrical connections and the parameter settings . . . 80
9.3 Installation with electrical backup, domestic hot water tank and underfloor heating . . . 82
9.3.1 Carrying out the electrical connections and the parameter settings . . . 83
9.4 Installation with a swimming pool . . . 84
9.4.1 Connecting a swimming pool . . . 84
9.4.2 Configuring swimming pool heating . . . 85

10 Operation . . . 85
10.1 Regional and ergonomic parameters . . . 85
10.2 Activate/deactivate the child lock . . . 86
10.3 Personalising the zones . . . 86
10.3.1 Definition of the term "zone" . . . 86
10.3.2 Changing the name and symbol for a zone . . . 86
10.4 Personalising the activities . . . 87
10.4.1 Definition of the term "Activity" . . . 87
10.4.2 Changing the name of an activity . . . 87
10.4.3 Changing the temperature of an activity . . . 88
10.5 Room temperature for a zone . . . 88
10.5.1 Selecting the operating mode . . . 88
10.5.2 Activating and configuring a timer programme for heating . . . 89
10.5.3 Activating and configuring a timer programme for cooling . . . 90
10.5.4 Changing the room temperature temporarily . . . 90
10.6 Domestic hot water temperature . . . 91
10.6.1 Selecting the operating mode . . . 91
10.6.2 Activating and configuring a timer programme for domestic hot water . . . 91
10.6.3 Forcing domestic hot water production (override) . . . 93
10.6.4 Modifying the domestic hot water set point temperatures . . . 93
10.7 Managing the heating, cooling and domestic hot water production . . . 93
10.7.1 Shutting off the heating and cooling . . . 93
10.7.2 Forcing cooling . . . 94
10.7.3 Shutting off the heating in summer . . . 94
10.7.4 Shutting off domestic hot water production . . . 94
10.7.5 Periods of absence or going on holiday . . . 95
10.8 Monitoring the energy consumption . . . 96
10.9 Starting and stopping the heat pump . . . 97
10.9.1 Starting the heat pump . . . 97
10.9.2 Shutting down the heat pump . . . 97

11 Maintenance . . . 97
11.1 Precautions to be taken before maintenance operations . . . 97
11.2 List of inspection and maintenance operations . . . 98
11.3 Checking the fluid for the hydraulic circuit separation kit (glycol kit) . . . 99
11.4 Cleaning the magnetic sieve filters . . . 99
11.4.1 Flush the magnetic sieve filters (quick annual maintenance) . . . 99
11.4.2 Full cleaning of the magnetic sieve filters . . . 100
11.5 Impressed current anode . . . 100
11.6 Check the hydraulic pressure . . . 101
11.7 Checking operation of the appliance . . . 101
11.8 Replacing the user interface battery . . . 101
11.9 Drain the appliance on the heating circuit side . . . 102
11.10 Draining the domestic hot water circuit . . . 102

12 Troubleshooting . . . 102
12.1 Resetting the safety thermostat . . . 102
12.2 Resolving operating errors . . . 103
12.2.1 Types of error code . . . 103
12.2.2 Alarm codes linked to the EHC–04 PCB . . . 103
12.2.3 Error codes linked to the EHC–04 PCB . . . 103

12.2.4 Fault codes linked to the EHC–04 PCB . . . 106
12.3 Displaying and clearing the error memory . . . 107
12.4 Accessing information on the hardware and software versions . . . 107

13 Decommissioning and disposal . . . 108
13.1 Decommissioning procedure . . . 108
13.2 Disposal and recycling . . . 108

14 Energy savings . . . 108

15 Spare parts . . . 109
15.1 Indoor unit . . . 109

16 Appendix . . . 115
16.1 Risk of an electrical fault . . . 115
16.2 Protecting the outdoor unit from frost with a manual drain solution . . . 115
16.3 Name and symbol of the zones . . . 115
16.4 Name and temperature of the activities . . . 116
16.5 Product fiche and package fiche . . . 116
16.5.1 Product fiche . . . 116
16.5.2 Product fiche – Temperature controller . . . 117
16.5.3 Package fiche . . . 118
16.5.4 Package fiche - Combination heaters (boilers or heat pumps) . . . 120

1 Safety instructions and recommendations

1.1 Safety

Operation	**Danger** This appliance can be used by children aged from 3 years and above and persons with reduced physical, sensory or mental capabilities or lack of experience and knowledge if they have been given supervision or instruction concerning use of the appliance in a safe way and understand the hazards involved. Children shall not play with the appliance. Children aged between 3 and 8 years are only permitted to use the tap connected to the water heater. Children must not carry out any unsupervised cleaning or maintenance operations. **Warning** This appliance is equipped with a radioelectric antenna. When the appliance is operating normally, all persons must keep at least 20 cm away from this antenna to ensure they are protected from its electromagnetic field. The user may only be within this limit when the appliance is powered off.
Electrical	**Important** Before any work on the appliance, carefully read all documents that accompany the product. These documents are also available on our website. See the last page. **Warning** • Install the appliance in accordance with national rules on electrical installation. • If a power supply cable comes with the appliance and it turns out to be damaged, it must be replaced by the manufacturer, its after-sales service or persons with similar qualifications in order to avoid danger. • If the appliance is not wired in the factory, carry out the wiring according to the wiring diagram described in the chapter Electrical Connections. • This appliance must be connected to the protective earthing. • Earthing must comply with the prevailing installation standards. • Earth the appliance before making any electrical connections. • The appliance is intended to be permanently connected to the mains. • A disconnection device must be fitted to the fixed wiring in accordance with the installation rules. • Type and calibre of the protective equipment: refer to the "Recommended cable cross-sections" chapter. • To connect the appliance to the electricity mains, refer to the "Electrical Connections" chapter. In order to avoid the danger of an unexpected thermal circuit breaker reset, this appliance must not be powered through an external switch, such as a timer, or be connected to a circuit which is regularly switched on and off by the electricity provider.

Domestic water	**Caution** Draining the domestic hot water tank: 1. Shut off the domestic cold water inlet. 2. Open a hot water tap in the installation. 3. Open a valve on the safety unit. 4. When the water stops flowing, the domestic hot water tank has been drained. **Caution** • The pressure limiter device (safety pressure relief valve or combination valve) must be regularly operated in order to remove limescale deposits and ensure that it is not blocked. • The drain of the pressure limiter device must be connected to the discharge leading to the waste water system. • As water may flow out of the discharge pipe, the pipe must be kept open to the open air, in a frost-free environment, and at a continuous downward gradient. • A pressure reducer (not provided) is required when the supply pressure exceeds 80% of the pressure limiter device calibration and must be located upstream of the appliance. • There must be no cut-off devices between the pressure limiter device and the DHW cylinder. To ascertain the type, specifications and connection of the pressure limiter device, refer to the chapter Connecting the domestic hot water circuit in the installation and service manual.
Hydraulics	**Caution** Respect the minimum and maximum water pressure and temperature to ensure the appliance operates correctly. See chapter on Technical Specifications.
Installation	**Important** Allow the space required to install the appliance correctly, referring to the "Installation" chapter.

1.2 General instructions

Installation	• The system must satisfy each point in the rules in force in the country that govern works and interventions in individual homes, blocks of flats or other buildings. • Only qualified professionals are authorised to work on the appliance and the heating installation. They must respect prevailing local and national regulations during fitting, installation and maintenance of the installation. • Commissioning must be performed by a qualified professional.

1.3 Electrical wiring

General	• Only a qualified installer or qualified service person are allowed to carry out the electrical work of the indoor and outdoor units. Under no circumstances must this work be done by an unqualified individual since failure to carry out the work properly may result in electric shocks and/or electrical leaks. • The appliance must be installed in accordance with national wiring regulations. Capacity shortages in the power supply circuit or an incomplete installation may cause an electric shock or fire.
Precautions	**Danger** Before any wiring work on the electrical circuit, switch off the power supply, check that no voltage is present and secure the circuit breaker with a circuit breaker lock-out. • Use wiring that meets the specifications in the Installation Manual and the stipulations in the local regulations and laws. Use of wiring which does not meet the specifications may give rise to electric shocks, electrical leakage, smoking and/or a fire. • Always connect a protective earthing cable (grounding. Earthing must comply with the prevailing installation standards. Earth the appliance before making any electrical connections. Incomplete grounding can cause a malfunction or electric shock. • To avoid electric shock, make sure that the length of the conductors between the strain relief device and the terminal blocks is such that the active conductors are put under tension before the earth conductor. • Install a circuit breaker that meets the specifications in the installation manual and the stipulations in the local regulations and laws. • Install the circuit breaker where it can be easily accessed by the technician. • In order to avoid the danger of an unexpected thermal circuit breaker reset, this appliance must not be powered through an external switch, such as a timer, or be connected to a circuit which is regularly switched on and off by the electricity provider. • If a power supply cable comes with the appliance and it turns out to be damaged, it must be replaced by the manufacturer, its after-sales service or persons with similar qualifications in order to avoid danger. • When connecting the appliance to the electricity mains or carrying out any other wiring work, refer to the instructions given in the installation manual and the provided wiring diagrams. • Separate the very low voltage cables from the 230/400 V power supply cables.

1.4 Domestic water safety

General	• Heating water and domestic water must not come into contact with each other. Domestic water must not circulate through the exchanger. • Take precautions with the domestic hot water. Depending on the heat pump settings, the domestic hot water temperature may exceed 65 °C. • To limit the risk of burns, install a device limiting the temperature of the hot water, such as a thermostatic mixing valve, for example. • Limit temperature at the draw-off point: the maximum domestic hot water temperature at the draw-off point is subject to special regulations in the various countries in which the appliance is sold in order to protect the user. These special regulations be observed when installing the appliance. • In accordance with safety rules, a safety pressure relief valve calibrated to 0.7 MPa (7 bar) must be installed on the tank's domestic cold water inlet. • A domestic expansion vessel (not supplied) of a suitable size may be connected between the domestic cold water input and the combination valve, and prevents the domestic safety pressure relief valve being activated. No cut-off device must be located between these two components. • To drain the domestic hot water circuit, see the **Maintenance** section.

1.5 Water connections

General	• To drain the domestic hot water circuit. See chapter **Maintenance**. • Limit temperature at the draw-off point: the maximum domestic hot water temperature at the draw-off point is subject to special regulations in the various countries in which the appliance is sold in order to protect the user. These special regulations be observed when installing the appliance.
Precautions	• Insulate the pipes to reduce heat losses to a minimum. • Fit drainage valves between the indoor unit and the heating circuit. • If radiators are connected directly to the heating circuit, make sure that there is enough volume of heating water available in the installation. For example, install a pressure actuated bypass valve and a buffer tank between the indoor unit and the heating circuit. • Respect the minimum and maximum water pressure and temperature (70°C) to ensure the appliance operates correctly. See chapter on Technical Specifications. • The hydraulic installation must be capable of handling a minimum flow rate at all times. • Heating water and domestic water must not come into contact with each other. Domestic water must not circulate through the exchanger.

1.6 Installation location

Precautions	• Install the indoor unit and outdoor unit on a solid, stable structure able to bear its weight. • Install the indoor unit in a frost-free location. • Insulate the pipes to reduce heat losses to a minimum. • Do not install the heat pump in a location that may be subject to a risk of exposure to combustible gas. If there is a combustible gas leak and the gas becomes concentrated around the unit, a fire may occur. • Do not install the heat pump in a place that: - has an atmosphere with a high salt content or a corrosive atmosphere, - is exposed to combustible gas - is exposed to steam and combustion gas, - may get covered in snow. • In coastal areas, the salt air or sulphate gases in the environment may cause corrosion which can shorten the lifespan of the heat pump.

1.7 Recommendations

Operation	• Do not power off the heat pump. The frost protection mode does not work if the heat pump is switched off. • If you do not need to heat your home for a long period, turn off the heating function or activate the frost protection mode. See chapter **Select operating mode**. • If you need to switch off the heat pump in the event of a prolonged absence, drain the indoor unit, the heating system, the pipes between the indoor unit and outdoor unit, and the outdoor unit to prevent the system from freezing. • Keep the indoor unit and outdoor unit accessible at all times. • Regularly check the presence of water and pressure in the heating system. • Do not touch radiators for long periods. Depending on the heat pump settings, the temperature of the radiators may exceed 60 °C. • Do not drain the installation, except in cases of absolute necessity. Examples: - Several months' absence with the risk of freezing in the building. See chapter **Maintenance**. - disposal. See chapter **Decommissioning and disposal**.

1.8 Maintenance and repair work

General	• Maintenance work must be carried out by a qualified professional. • After maintenance or repair work, check the entire heating system to ensure that there are no leaks. • Remove the casing only to perform maintenance and repair work. Put the casing back in place after maintenance and repair work.
Precautions	• Before any work, switch off the power supply to the heat pump, the indoor unit and the backup electric heater, if present. • Use only dehydrated nitrogen for detecting leaks or for pressurised tests. • Wait for approximately 20-30 seconds for the outdoor unit capacitors to be discharged, and check that the lights on the outdoor unit PCBs have gone out. • Locate and correct the cause of power cut before resetting the safety thermostat.

See also
Protecting the outdoor unit from frost with a manual drain solution, page 115

1.9 Liabilities

Manufacturer's liability	Our products are manufactured in compliance with the requirements of the various Directives applicable. They are therefore delivered with the CE marking and any documents necessary. In the interests of the quality of our products, we strive constantly to improve them. We therefore reserve the right to modify the specifications given in this document. Our liability as manufacturer may not be invoked in the following cases: • Failure to abide by the instructions on installing the appliance. • Failure to abide by the instructions on using the appliance. • Faulty or insufficient maintenance of the appliance.
Installer's liability	The installer is responsible for the installation and initial commissioning of the appliance. The installer must observe the following instructions: • Read and follow the instructions given in the manuals provided with the appliance. • Install the appliance in compliance with prevailing legislation and standards. • Carry out initial commissioning and any checks necessary. • Explain the installation to the user. • If maintenance is necessary, warn the user of the obligation to check the appliance and keep it in good working order. • Give all the instruction manuals to the user.
User's liability	To guarantee optimum operation of the system, the user must follow the instructions below: • Read and follow the instructions given in the manuals provided with the appliance. • Call on a qualified professional to carry out installation and initial commissioning. • Get your installer to explain your installation to you. • Have the required inspections and maintenance carried out by a qualified installer. • Keep the instruction manuals in good condition close to the appliance.

2 Standard delivery

Delivery includes several packages:

Tab.1

Package	Contents
Outdoor unit	• An outdoor unit • A manual
Indoor unit	• An indoor unit • An outdoor temperature sensor • A filter to be installed on the flow to the outdoor unit • An accessories bag containing: - hoses, - gaskets - etc. • An installation, user and service manual • A user manual for the outdoor unit spare parts • Terms of warranty • A check list for commissioning • A quick user guide • A list of important points to ensure successful installation

3 Symbols used

3.1 Symbols used in the manual

This manual uses various danger levels to draw attention to special instructions. We do this to improve user safety, to prevent problems and to guarantee correct operation of the appliance.

Danger
Risk of dangerous situations that may result in serious personal injury.

Danger of electric shock
Risk of electric shock.

Warning
Risk of dangerous situations that may result in minor personal injury.

Caution
Risk of material damage.

Important
Please note: important information.

See
Reference to other manuals or pages in this manual.

3.2 Symbols used on the appliance

Fig.1



MW-1001705-2

Caution: Danger of electric shock, live parts. Disconnect the mains power (1) prior to carrying out any work (2).

Fig.2



MW-6070178-1

3 Alternating current
4 Protective earthing

Fig.3 Symbols used on the connection label

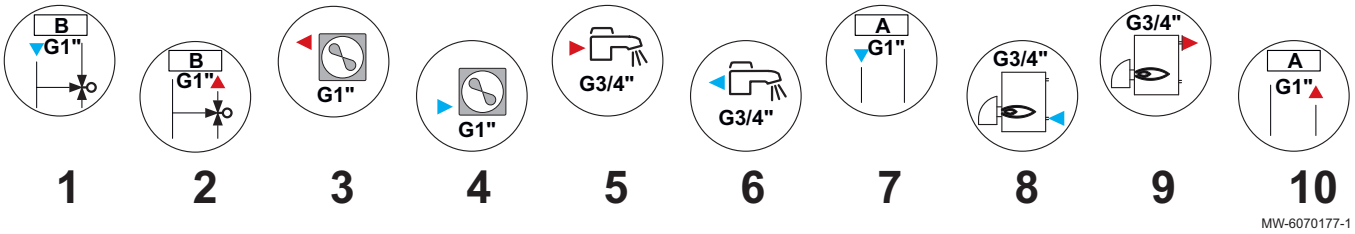

1 Circuit return (CIRC B) (optional)
2 Circuit flow (CIRC B) (optional)
3 Return from outdoor unit
4 Flow to the outdoor unit
5 Domestic hot water outlet
6 Domestic cold water inlet
7 Heating circuit return (CIRC A)
8 Flow to boiler backup
9 Return from boiler backup
10 Heating circuit flow (CIRC A)

3.3 Symbols used on the data plate

Fig.4

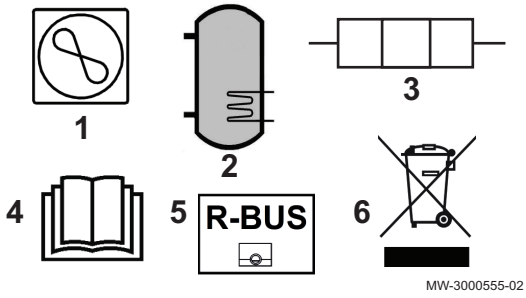

1 Information on the heat pump: maximum operating pressure and output absorbed by the indoor module
2 Information on the domestic hot water tank: volume, maximum operating pressure and standby losses of the domestic hot water tank
3 Information on the electrical back-up: power supply and maximum output (only for versions with electrical back-up)
4 Before installing and commissioning the appliance, carefully read the instruction manuals provided
5 This symbol indicates compatibility with eTwist.
6 Dispose of used products in an appropriate recovery and recycling structure

4 Technical specifications

4.1 Homologations

4.1.1 Directives

Remeha hereby declares that the Eria Tower Ace MB radio-electrical type equipment is a product principally designed for domestic use and compliant with the following directives and standards. It has been manufactured and put into circulation in accordance with the requirements of the European Directives.

The full text of the EU declaration of conformity is supplied separately with your appliance.

In addition to the legal requirements and guidelines, the supplementary guidelines in this manual must also be followed.

For all provisions and directives referred to in these instructions and the EU declaration of conformity, it is agreed that all addenda or subsequent provisions will apply at the time of installation.

4.1.2 Factory test

Before leaving the factory, each indoor unit is tested on the following items:

- Leak-tightness of the heating circuit
- Leak-tightness of the domestic hot water circuit
- Electrical safety

4.1.3 Bluetooth® wireless technology

Fig.5 Logo



AD-3001854-01

This product is equipped with Bluetooth wireless technology.

The Bluetooth® word mark and logos are registered trademarks owned by Bluetooth SIG, Inc. and any use of such marks by BDR Thermea Group is under license. Other trademarks and trade names are those of their respective owners.

4.2 Technical data

4.2.1 Compatible heating devices

Tab.2

Outdoor unit	Associated/compatible indoor units	HP KEYMARK Registration Number
MONO AWHP 6 MR	Eria MB EL	037-0073-21
MONO AWHP 8 MR	Eria MB EL	037-0073-21
MONO AWHP 8 TR	Eria MB EL	037-0073-21
MONO AWHP 11 TR	Eria MB EL	037-0074-21

See also
Product fiche, page 116
Package fiche, page 118

4.2.2 Minimum volume for operation of the heat pump

A minimum volume of fluid is required in the heating circuit to ensure sufficient energy to defrost and protect the heat pump.

Tab.3

Volume	Unit	MONO AWHP 6 MR	MONO AWHP 8 MR	MONO AWHP 8 TR	MONO AWHP 11 TR
Pure water	l	37.0	37.0	37.0	48.0

4.2.3 Radio-electrical specifications for the indoor unit

Tab.4

Specifications	Specifications
Operating temperature range	+7 °C to +30 °C
Bluetooth® frequency band	2400 – 2483.5 MHz
Bluetooth® output	+7.1 dBm
GSM/GPRS frequency band	880 MHz – 915 MHz 1710 MHz – 1880 MHz
GSM/GPRS output power	33 dBm (E-GSM 900 MHz) 30 dBm (DCS 1800 MHz)

4.2.4 Heat pump

The specifications are valid for a new appliance with clean heat exchangers.

Maximum operating pressure: 0.3 MPa (3 bar)

Tab.5 Outdoor unit conditions of use

Limit operating temperatures		MONO AWHP 6 MR	MONO AWHP 8 MR	MONO AWHP 8 TR	MONO AWHP 11 TR
Heating mode	Water (maximum temperature)	+60 °C	+60 °C	+60 °C	+60 °C
	Outdoor air	-20 °C / +35 °C	-20 °C / +35 °C	-20 °C / +35 °C	-20 °C / +35 °C
Cooling mode	Water (maximum temperature)	+5 °C	+5 °C	+5 °C	+5 °C
	Outdoor air	-5 °C / +46 °C	-5 °C / +46 °C	-5 °C / +46 °C	-5 °C / +46 °C

Tab.6 Heating mode: outdoor air temperature +7 °C, water temperature at the outlet +35 °C. Performances in accordance with EN 14511-2.

Measurement type	Unit	MONO AWHP 6 MR	MONO AWHP 8 MR	MONO AWHP 8 TR	MONO AWHP 11 TR
Heating capacity	kW	6.0	9.0	9.0	11.2
Coefficient of performance (COP)		4.83	4.51	4.51	4.54
Electrical power input	kWe	1.24	2.00	2.00	2.47

Tab.7 Heating mode: outdoor air temperature +2°C, water temperature at the outlet +35°C. Performances in accordance with EN 14511-2.

Measurement type	Unit	MONO AWHP 6 MR	MONO AWHP 8 MR	MONO AWHP 8 TR	MONO AWHP 11 TR
Heating capacity	kW	6.0	6.8	6.8	9.0
Coefficient of Performance (COP)		3.64	3.60	3.60	3.67
Electrical power input	kWe	1.65	1.89	1.89	2.45

Tab.8 Heating mode: outdoor air temperature –7 °C, water temperature at the outlet +35 °C. Performances in accordance with EN 14511-2.

Measurement type	Unit	MONO AWHP 6 MR	MONO AWHP 8 MR	MONO AWHP 8 TR	MONO AWHP 11 TR
Heating capacity	kW	6.0	7.5	7.5	9.0
Coefficient of Performance (COP)		3.11	2.69	2.69	3.27
Absorbed electrical power	kWe	1.93	2.79	2.79	2.75

Tab.9 Heating mode: outdoor air temperature +7 °C, water temperature at the outlet +55 °C. Performances in accordance with EN 14511-2.

Measurement type	Unit	MONO AWHP 6 MR	MONO AWHP 8 MR	MONO AWHP 8 TR	MONO AWHP 11 TR
Heating capacity	kW	6.0	9.0	9.0	11.2
Coefficient of Performance (COP)		2.87	2.78	2.78	2.70
Electrical power input	kWe	2.09	3.24	3.24	4.15

Tab.10 Cooling mode: outdoor air temperature +35 °C, water temperature at the outlet +18 °C. Performances in accordance with EN 14511-2.

Measurement type	Unit	MONO AWHP 6 MR	MONO AWHP 8 MR	MONO AWHP 8 TR	MONO AWHP 11 TR
Cooling capacity	kW	6.0	7.5	7.5	10.0
Energy efficiency ratio (EER)		4.26	4.42	4.42	4.74
Electrical power input	kWe	1.41	1.70	1.70	2.11

Tab.11 Common specifications

Measurement type	Unit	MONO AWHP 6 MR	MONO AWHP 8 MR	MONO AWHP 8 TR	MONO AWHP 11 TR
Total dynamic head at nominal flow rate	kPa	63	44	44	25
Nominal air flow rate	m^3/h	2640	2640	2640	3000
Outdoor unit power supply voltage	V	230	230	400	400
Start-up amperage (max)	A	9	9	4	5
Maximum amperage	A	13	22	11.5	13
Maximum electrical power absorbed by the heat pump	kW	5.06	5.06	7.94	8.97
Power factor	%	99	99	94	94
Acoustic power - Inside (1)	dB(A)	41	41	41	41
Acoustic power - Outside	dB(A)	58	58	58	60
Refrigerant R410A	kg	2.4	2.4	2.4	3.3
R410A refrigerant(2)	tCO_2e	5,011 (4.618)	5,011 (4,618)	5,011 (4,618)	6,890 (6,349)
Refrigerant circuit type		Hermetically sealed	Hermetically sealed	Hermetically sealed	Hermetically sealed

(1) Noise radiated by the envelope - Test run in accordance with the NF EN 12102 standard, temperature conditions: air 7 °C, water 55 °C
(2) The quantity of refrigerant in tonnes of CO_2 equivalent is calculated using the following formula: quantity (in kg) of refrigerant x GWP/1000. The Global Warming Potential (GWP) of the R410A is 2088 following the IPCC fourth assessment report (1924 following IPCC fifth assessment report).

Tab.12 Weight of the indoor unit

	Unit	Eria MB EL
Weight (empty)	kg	130

4.2.5 Combination heaters with medium-temperature heat pump

Tab.13 Technical parameters for heat pump combination heaters (parameters declared for medium-temperature application)

Product name			MONO AWHP 6 MR	MONO AWHP 8 MR	MONO AWHP 8 TR
Air-to-water heat pump			Yes	Yes	Yes
Water-to-water heat pump			No	No	No
Brine-to-water heat pump			No	No	No
Low-temperature heat pump			No	No	No
Equipped with a supplementary heater			Yes	Yes	Yes
Heat pump combination heater			Yes	Yes	Yes
Rated heat output under average conditions(1)	*Prated*	kW	6	9	9
Rated heat output under colder conditions	*Prated*	kW	4	5	5
Rated heat output under warmer conditions	*Prated*	kW	6	9	9
Declared capacity for heating for part load at an indoor temperature of 20 °C and outdoor temperature T_j					
T_j = -7 °C	*Pdh*	kW	5.3	7.5	7.5
T_j = +2 °C	*Pdh*	kW	3.2	4.6	4.6
T_j = +7 °C	*Pdh*	kW	2.9	2.9	2.9
T_j = +12 °C	*Pdh*	kW	2.7	2.9	2.9
T_j = bivalent temperature	*Pdh*	kW	5.3	7.5	7.5
T_j = operation limit temperature	*Pdh*	kW	4.9	6.7	6.7
Bivalent temperature	T_{biv}	°C	-7	-7	-7

Product name			MONO AWHP 6 MR	MONO AWHP 8 MR	MONO AWHP 8 TR
Degradation coefficient(2)	*Cdh*	—	1.0	1.0	0.9
Seasonal space heating energy efficiency under average conditions	η_s	%	132	139	139
Seasonal space heating energy efficiency under colder conditions	η_s	%	107	106	104
Seasonal space heating energy efficiency under warmer conditions	η_s	%	159	169	167
Declared coefficient of performance or primary energy ratio for part load at an indoor temperature of 20 °C and outdoor temperature T_j					
T_j = -7 °C	*COPd*	-	2.09	1.96	1.96
T_j = +2 °C	*COPd*	-	3.22	3.50	3.50
T_j = +7 °C	*COPd*	-	4.62	4.90	4.90
T_j = +12 °C	*COPd*	-	6.09	6.80	6.80
T_j = bivalent temperature	*COPd*	-	2.09	1.96	1.96
T_j = operation limit temperature	*COPd*	-	1.90	1.82	1.81
Operation limit temperature for air-to-water heat pumps	*TOL*	°C	-20	-20	-20
Heating water operating limit temperature	*WTOL*	°C	60	60	60
Electrical power consumption					
Off mode	P_{OFF}	kW	0.015	0.015	0.022
Thermostat-off mode	P_{TO}	kW	0.015	0.015	0.022
Stand-by	P_{SB}	kW	0.015	0.015	0.022
Crankcase heater mode	P_{CK}	kW	0.000	0.000	0.000
Supplementary heater					
Rated heat output	*Psup*	kW	1.1	1.9	1.9
Type of energy input			Electricity	Electricity	Electricity
Other specifications					
Capacity control			Variable	Variable	Variable
Sound power level, indoors - outdoors	L_{WA}	dB	41 – 58	41 – 58	41 – 58
Annual energy consumption under average conditions	Q_{HE}	kWh	3674	4933	4941
Annual energy consumption under colder conditions	Q_{HE}	kWh	3136	4579	4618
Annual energy consumption under warmer conditions	Q_{HE}	kWh	1791	2587	2590
Rated air flow rate, outdoors for air-to-water heat pumps	—	m^3/h	2660	2660	2660
Declared load profile			L	L	L
Daily electricity consumption	Q_{elec}	kWh	4.650	4.710	4.710
Annual electricity consumption	*AEC*	kWh	972	981	981
Water heating energy efficiency	η_{wh}	%	105.00	104.00	104.00
Daily fuel consumption	Q_{fuel}	kWh	0.000	0.000	0.000
Annual fuel consumption	*AFC*	GJ	0	0	0

(1) The rated heat output *Prated* is equal to the design load for heating *Pdesignh*, and the rated heat output of a supplementary heater *Psup* is equal to the supplementary capacity for heating *sup(Tj)*.
(2) If *Cdh* is not determined by measurement, the default degradation coefficient is *Cdh* = 0.9.

Tab.14 Technical parameters for heat pump combination heaters (parameters declared for medium-temperature application)

Product name			**MONO AWHP 11 TR**
Air-to-water heat pump			Yes
Water-to-water heat pump			No
Brine-to-water heat pump			No
Low-temperature heat pump			No
Equipped with a supplementary heater			Yes
Heat pump combination heater			Yes
Rated heat output under average conditions(1)	*Prated*	kW	10
Rated heat output under colder conditions	*Prated*	kW	7
Rated heat output under warmer conditions	*Prated*	kW	10
Declared capacity for heating for part load at an indoor temperature of 20 °C and outdoor temperature T_j			
T_j = -7 °C	*Pdh*	kW	9.0
T_j = +2 °C	*Pdh*	kW	5.7
T_j = +7 °C	*Pdh*	kW	4.7
T_j = +12 °C	*Pdh*	kW	4.1
T_j = bivalent temperature	*Pdh*	kW	9.0
T_j = operation limit temperature	*Pdh*	kW	8.4
Bivalent temperature	T_{biv}	°C	-7
Degradation coefficient(2)	*Cdh*	—	0.9
Seasonal space heating energy efficiency under average conditions	η_s	%	134
Seasonal space heating energy efficiency under colder conditions	η_s	%	108
Seasonal space heating energy efficiency under warmer conditions	η_s	%	169
Declared coefficient of performance or primary energy ratio for part load at an indoor temperature of 20 °C and outdoor temperature T_j			
T_j = -7 °C	*COPd*	-	1.99
T_j = +2 °C	*COPd*	-	3.30
T_j = +7 °C	*COPd*	-	4.86
T_j = +12 °C	*COPd*	-	6.35
T_j = bivalent temperature	*COPd*	-	1.99
T_j = operation limit temperature	*COPd*	-	1.87
Operation limit temperature for air-to-water heat pumps	*TOL*	°C	-20
Heating water operating limit temperature	*WTOL*	°C	60
Electrical power consumption			
Off mode	P_{OFF}	kW	0.022
Thermostat-off mode	P_{TO}	kW	0.022
Stand-by	P_{SB}	kW	0.022
Crankcase heater mode	P_{CK}	kW	0.000
Supplementary heater			
Rated heat output	*Psup*	kW	1.6
Type of energy input			Electricity
Other specifications			
Capacity control			Variable
Sound power level, indoors - outdoors	L_{WA}	dB	41 – 60

Product name			MONO AWHP 11 TR
Annual energy consumption under average conditions	Q_{HE}	kWh	6012
Annual energy consumption under colder conditions	Q_{HE}	kWh	6207
Annual energy consumption under warmer conditions	Q_{HE}	kWh	3023
Rated air flow rate, outdoors for air-to-water heat pumps	—	m^3/h	2700
Declared load profile			L
Daily electricity consumption	Q_{elec}	kWh	5.560
Annual electricity consumption	*AEC*	kWh	1150
Water heating energy efficiency	η_{wh}	%	89.00
Daily fuel consumption	Q_{fuel}	kWh	0.000
Annual fuel consumption	*AFC*	GJ	0
(1) The rated heat output *Prated* is equal to the design load for heating *Pdesignh*, and the rated heat output of a supplementary heater *Psup* is equal to the supplementary capacity for heating *sup(Tj)*. (2) If *Cdh* is not determined by measurement, the default degradation coefficient is *Cdh* = 0.9.			

See
The back cover for contact details.

4.2.6 Domestic hot water tank

Tab.15 Technical specifications primary circuit (heating water)

Specification	Unit	Value
Maximum operating temperature with electrical back-up	°C	75
Minimum operating temperature	°C	7
Maximum operating pressure	MPa (bar)	0.3 (3.0)
Domestic hot water tank exchanger capacity	Litres	11.3
Exchange surface	m²	1.7

Tab.16 Technical specifications secondary circuit (domestic water)

Specification	Unit	Value
Maximum operating temperature	°C	80
Minimum operating temperature	°C	10
Maximum operating pressure	MPa (bar)	1.0 (10.0)
Water capacity	Litres	177

4.2.7 Sensor specifications

■ Outdoor temperature sensor specifications

Tab.17 AF60 outdoor temperature sensor

Temperature	°C	-20	-16	-12	-8	-4	0	4	8	12	16	20	24	30	35
Resistance	Ω	2392	2088	1811	1562	1342	1149	984	842	720	616	528	454	362	301

■ Heating flow sensor specifications

Tab.18 NTC 10K heating flow sensor

Temperature	°C	0	10	20	25	30	40	50	60	70	80	90
Resistance	Ω	32014	19691	12474	10000	8080	5372	3661	2535	1794	1290	941

■ Specifications of the condenser flow and return temperature sensors

Tab.19 PT1000 temperature sensor

Temperature	°C	-10	0	10	20	30	40	50	60	70	80	90	100
Resistance	Ω	961	1000	1039	1077	1117	1155	1194	1232	1271	1309	1347	1385

4.2.8 Circulating pump

Important
The benchmark for the most efficient circulating pumps is EEI ≤ 0.20.

The circulating pump in the indoor unit is a variable speed pump. It adapts its speed to the distribution network.

Fig.6

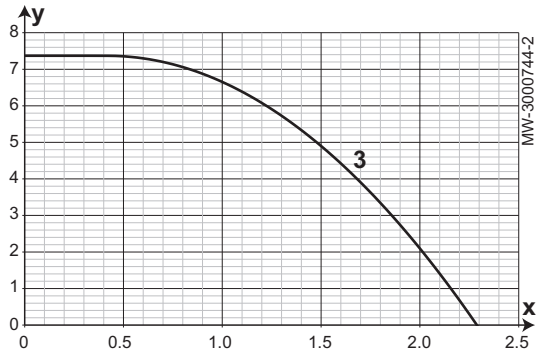

y Available pressure in metres of water column (mWc)
x Water flow rate in cubic metres per hour (m^3/h)
3 Available pressure for the outside units

4.3 Dimensions and connections of the indoor unit

Fig.7

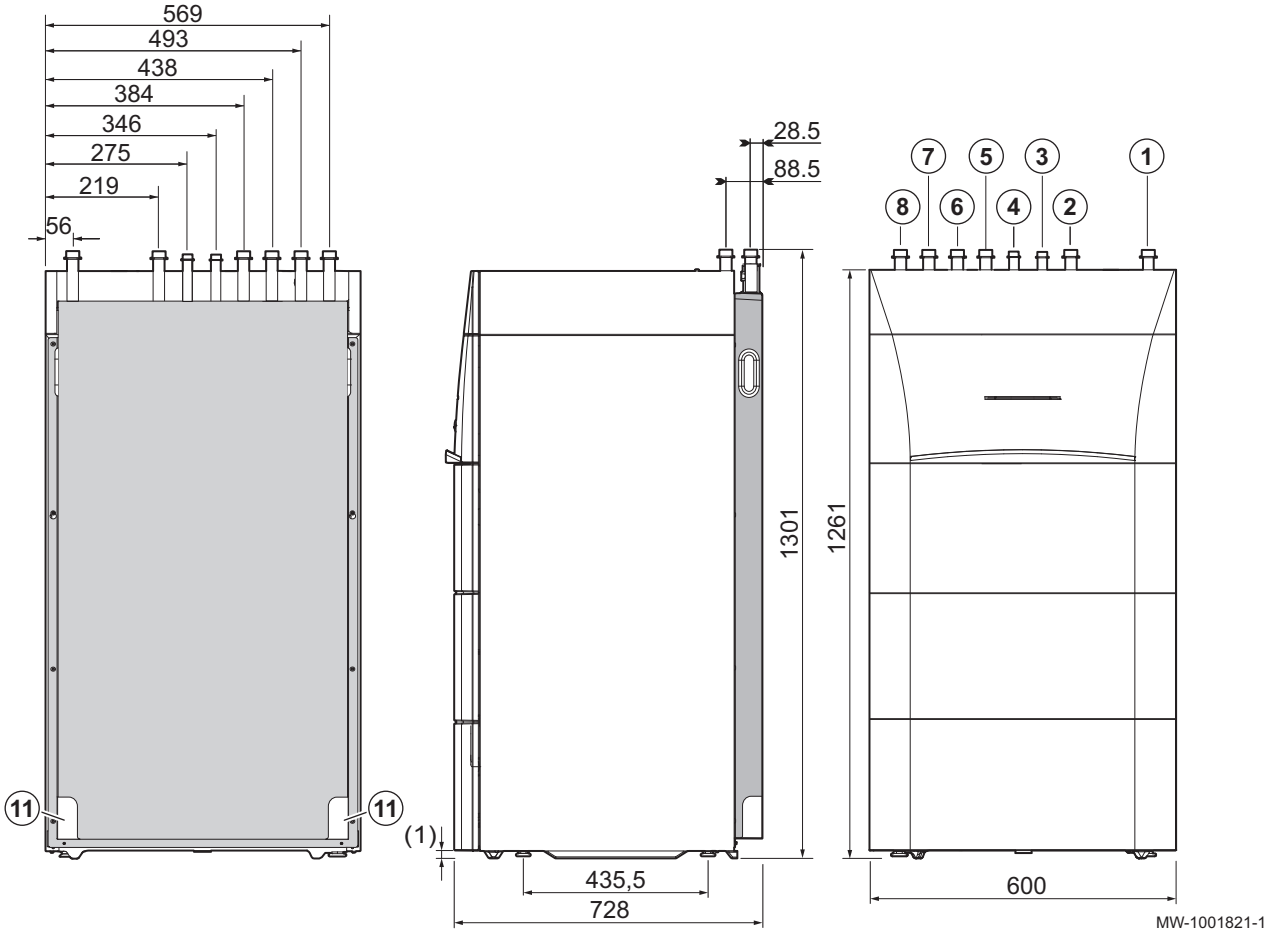

1 Heating circuit flow G1”
2 Heating circuit return G1"
3 Domestic cold water inlet G3/4"
4 Domestic hot water flow G3/4"
5 Flow to the outdoor unit
6 Return from outdoor unit
7 Second circuit flow (optional)
8 Second circuit return (optional)
11 Condensate discharge
(1) Adjustable feet

4.4 Electrical diagram

Fig.8

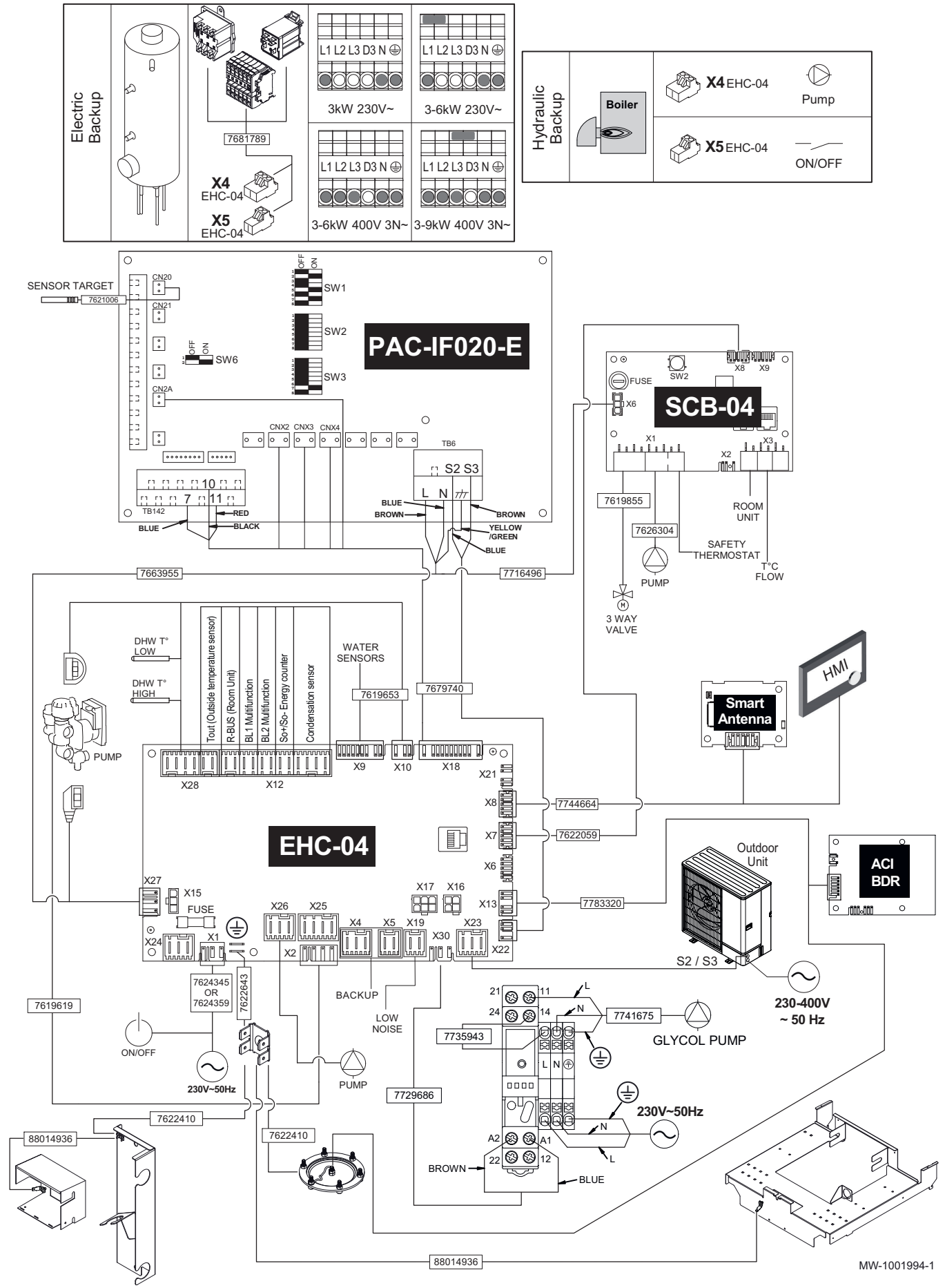
Electric Backup
7681789
X4 EHC-04
X5 EHC-04
L1 L2 L3 D3 N
3kW 230V~
3-6kW 230V~
3-6kW 400V 3N~
3-9kW 400V 3N~
Hydraulic Backup
Boiler
X4 EHC-04
X5 EHC-04
Pump
ON/OFF
SENSOR TARGET
7621006
PAC-IF020-E
SW1
SW2
SW3
SW6
CN20
CN21
CN2A
CNX2 CNX3 CNX4
TB6
TB142
RED
BLACK
BLUE
BROWN
YELLOW /GREEN
SCB-04
FUSE
SW2
X6
X1
X2
X3
X8
X9
7619855
7626304
PUMP
3 WAY VALVE
ROOM UNIT
SAFETY THERMOSTAT
T°C FLOW
7663955
7716496
DHW T° LOW
DHW T° HIGH
PUMP
Tout (Outside temperature sensor)
R-BUS (Room Unit)
BL1 Multifunction
BL2 Multifunction
So+/So- Energy counter
Condensation sensor
WATER SENSORS
7619653
7679740
X28
X12
X9
X10
X18
X21
EHC-04
X8
X7
X6
X13
7744664
7622059
7783320
HMI
Smart Antenna
ACI BDR
Outdoor Unit
S2 / S3
230-400V ~ 50 Hz
X27
X15
FUSE
X24
X1
X26
X25
X4
X5
X19
X30
X23
X22
X17
X16
X2
BACKUP
LOW NOISE
7624345 OR 7624359
7622643
7619619
ON/OFF
230V~50Hz
PUMP
7735943
7741675
GLYCOL PUMP
7729686
230V~50Hz
7622410
7622410
88014936
88014936
BROWN
BLUE
MW-1001994-1

Tab.20 Electrical diagram legend

230V~ 50 Hz	Main power supply for the indoor unit
230-400V~ 50 Hz	Power supply
3 WAY VALVE	Three-way valve
3 Way Valve DHW	Three-way domestic hot water valve
ACI BDR	Impressed current anode TAS PCB
BACKUP	Backup
BL1 Multifunction	BL 1 digital switching input for the electric power cut-off, for example
BL2 Multifunction	BL 2 digital switching input for the electric power cut-off, for example
Condensate sensor ON/OFF	Condensation sensor
DHW T° HIGH	Domestic hot water tank temperature sensor in the top section
DHW T° LOW	Domestic hot water tank temperature sensor in the bottom section
EHC-04	Main PCB for the heat pump
ELECTRIC BACKUP	Electrical backup
FUSE	Fuse
GLYCOL PUMP	Glycol pump - Optional
HMI	User interface
LOW NOISE	Connection cable for Silent mode - Optional
Outdoor Unit	Outdoor unit
ON/OFF	ON/OFF switch
OUTSIDE T° SENSOR	Outdoor temperature sensor
PAC IF020–E	PAC IF020–E PCB - interface for the outdoor unit
PUMP	Circulating pump
ROOM UNIT	eTwist connected room unit / Opentherm thermostat / ON/OFF thermostat / Room sensor
SAFETY THERMOSTAT	Safety thermostat for mixed heating circuit flow
SCB-04	PCB for controlling a second circuit - Optional
SENSOR TARGET	Water temperature sensor on the plate heat exchanger outlet
So+/So- ENERGY COUNTER	Energy meter
T°C FLOW	Outlet sensor
Tout (Outside temperature sensor)	Tout: outdoor temperature sensor
WATER SENSORS	Internal sensors and collectors for temperature, pressure and flow rate measurements

5 Description of the product

5.1 Main components

Fig.9 Main components

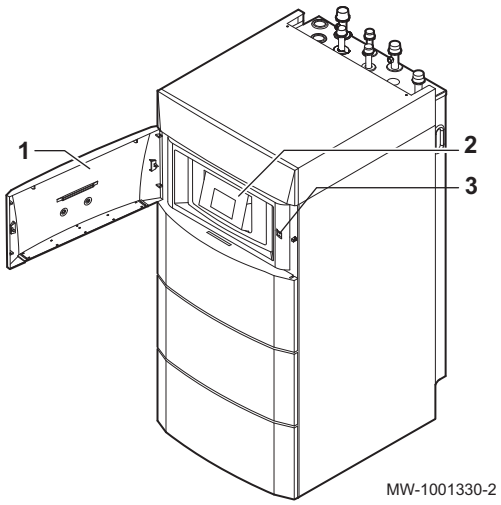

1 User interface access door
2 User interface
3 ON/OFF button

Fig.10 Indoor unit with electrical backup

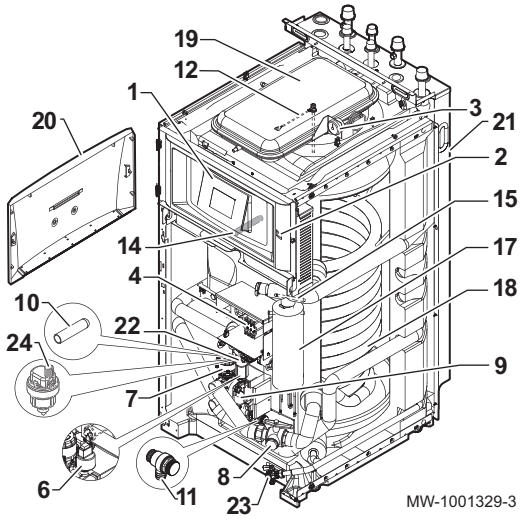

1 User interface
2 ON/OFF button
3 Mechanical manometer
4 Electrical backup terminal block
6 Electronic pressure gauge
7 3-way valve with reversal motor for heating/domestic hot water
8 Magnetic sieve filter
9 Main circulating pump
10 Immersion sleeve for the bottom domestic hot water sensor
11 Safety valve
12 Titanium impressed current anode
14 Immersion sleeve for the top domestic hot water sensor
15 System temperature sensor
17 Electrical backup
18 Heat exchanger for the production of domestic hot water in the tank (coil)
19 Expansion vessel
20 User interface access door
21 Rear panel
22 Flow meter
23 Domestic hot water tank drain valve
24 Air vent

Fig.11 Position of the PCBs

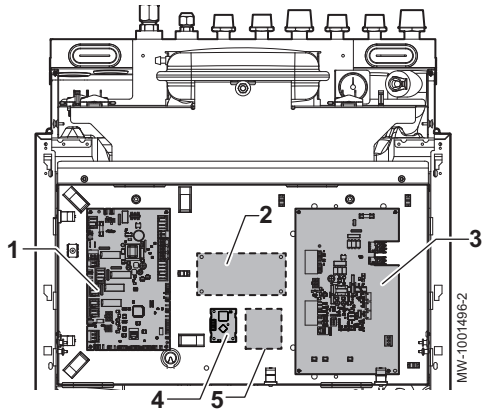

1 EHC–04 central unit PCB: control system for the heat pump and the first heating circuit (direct circuit)
2 Position for second circuit control system PCB: manages a second heating circuit
3 PAC IF020–E PCB: PCB for interface with the outdoor unit
4 BLE Smart Antenna PCB
5 ACI-BDR PCB

5.2 Description of the user interface

5.2.1 Description of the interface

Fig.12

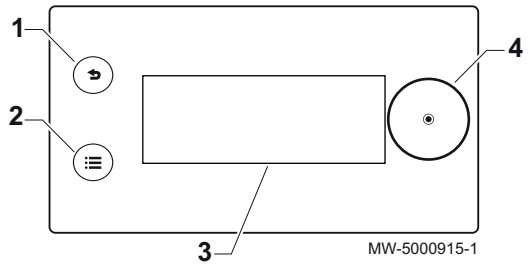

1 Back button
2 Main menu button
3 Display
4 Selection/validation button

5.2.2 Description of the standby screen

Fig.13

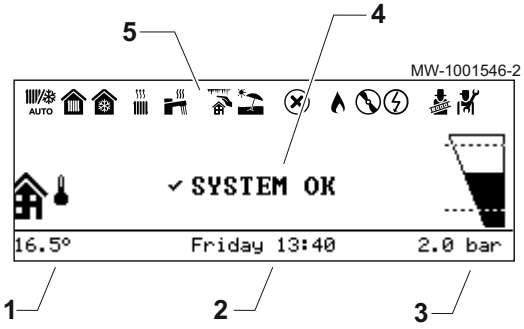

The user interface on your appliance automatically goes into standby mode if no buttons are pressed for a period of 5 minutes: the backlighting is switched off and information relating to the general status of the appliance is displayed.

Press one of the buttons on the interface to switch standby off.

1 Temperature measured by the outdoor temperature sensor
2 Day and time
3 Hydraulic pressure in the installation
4 General status of the appliance
5 Icons indicating the appliance status

5.2.3 Description of status icons

Tab.21

Icons	Description
AUTO	Automatic switch from heating mode to cooling mode
	• Steady symbol: heating active • Flashing symbol: heating in progress
	• Steady symbol: cooling active • Flashing symbol: cooling in progress
	• Steady symbol: domestic hot water available • Flashing symbol: domestic hot water production in progress
	Frost protection activated
	Summer mode activated. No heating possible: cooling and domestic hot water production only.
	Error detected
	The heat pump compressor is running
	The immersion heater is running
BOOST	Operating test mode activated
	Installer level activated

5.2.4 Description of the home screen

Fig.14

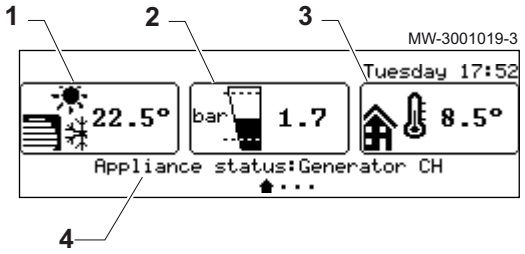

If the user interface is on standby, turn the ⊙ button to access the home screen.

1 Symbol for the appliance and circuit flow temperature
2 Hydraulic pressure
3 Temperature measured by the outdoor temperature sensor
4 Status of the appliance

5.2.5 Description of the Zone display

Fig.15

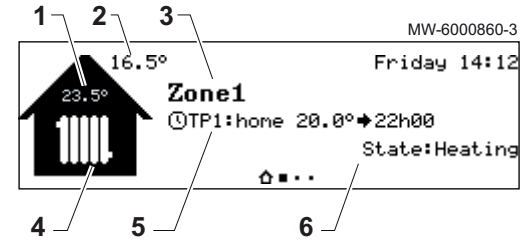

From the home screen, turn the ⊙ button to access the screens for the various zones within your installation.

1 Room temperature (if a room unit is installed)
2 Outdoor temperature
3 Name of the zone
4 Zone symbol
5 Operating mode currently active
6 Information on the circuit status

5.2.6 Description of the carousel

Fig.16



The carousel is used to quickly access the user interface menus. The displayed menus depend on the system configuration.

Display the carousel by pressing the Main menu ☰ button.

Scroll through the menu by turning the ⊙ button.

Tab.22

Symbol menu	Description of the symbols	Description
AUTO	**Operating mode**	Switching the central heating on/off, and/or the cooling if applicable
	Domestic Hot Water On/Off	Switching domestic hot water production on/off
	Heating temperature	Setting the activities temperature
	Water temperature	Modifying the domestic hot water setpoint temperatures
	Temporary heating temperature change	Temporarily modifying the requested room temperature until the next set-point temperature in the timer programme
	Hot water boost	Forcing domestic hot water production (override)
	System holiday mode	Periods of absence or going on holiday
	User settings	Accessing the list of parameters available to users
	Test mode	Performing an operating test on the heating or cooling
	Installer	Menu not accessible to the user Installer level: List of Installer menu parameters
	Finder	Menu not accessible to the user Installer level: Using the parameter search
	Signals status setpoints	Menu not accessible to the user Installer level: Displaying the measured values
	Energy counter	Monitoring the energy consumption
	Bluetooth	Establishing the Bluetooth® connection

Symbol menu	Description of the symbols	Description
	System settings	Customising the user interface
	Version information	Version information

6 Installation

6.1 Preparation

Important
Fit all of the options, particularly the second circuit option, onto the indoor module before the appliance is put into its final position.

6.2 Installation regulations

Warning
The components used for the connection to the cold water supply must comply with the prevailing standards and regulations in the country concerned.

Caution
The indoor unit and the outdoor unit must be installed by a qualified professional in accordance with prevailing local and national regulations.

6.3 Outdoor unit installation regulations

Caution
The outdoor unit must be installed by a qualified professional in accordance with prevailing local and national regulations.

See
Outdoor unit manual

6.4 Positioning the indoor unit

6.4.1 Location of the data plate on the indoor module

Fig.17

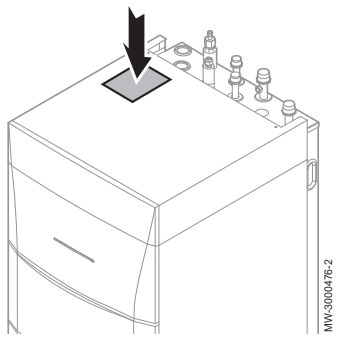

6.4.2 Bluetooth® label

The information on the Bluetooth® label can be used to establish the Bluetooth® connection between the smartphone and the heat pump when commissioning.

Fig.18

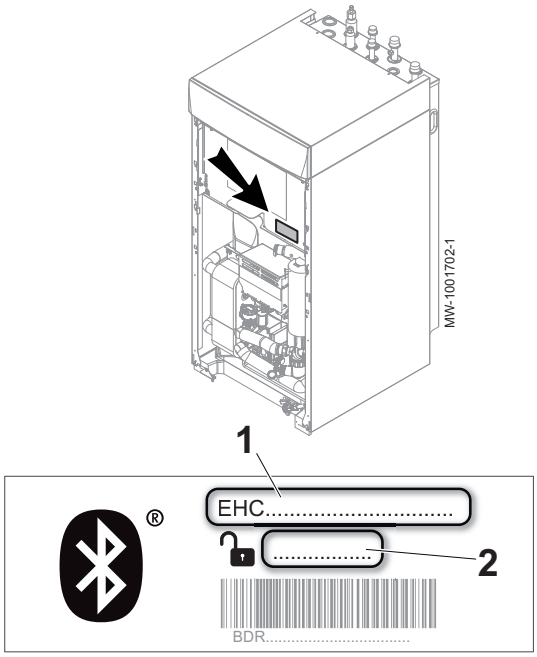

1 Name of appliance
2 Pairing code

6.4.3 Allowing sufficient space for the indoor module

Fig.19

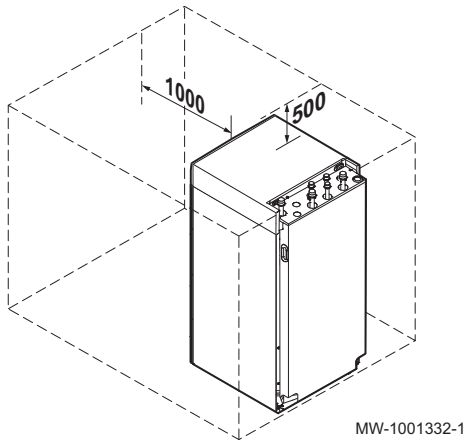

Warning
Do not install the appliance in a cupboard.

Allow sufficient space around the heat pump indoor module to ensure adequate access and facilitate maintenance.

6.4.4 Choosing the location for the heat pump

Caution
The indoor module must be installed in a frost-free location.

1. Decide on the ideal location, bearing in mind the space required by the heat pump and any legal directives.
2. Install the heat pump's indoor unit on a solid, stable support capable of bearing the weight of the heat pump when full of water and fitted with its various accessories.
3. Install the indoor unit as close as possible to the draw-off points in order to minimise energy losses through the pipes.
4. Install the heat pump's outdoor unit on a solid, stable support.

6.4.5 Levelling the indoor unit

Level the indoor unit using the four adjustable feet.

Fig.20

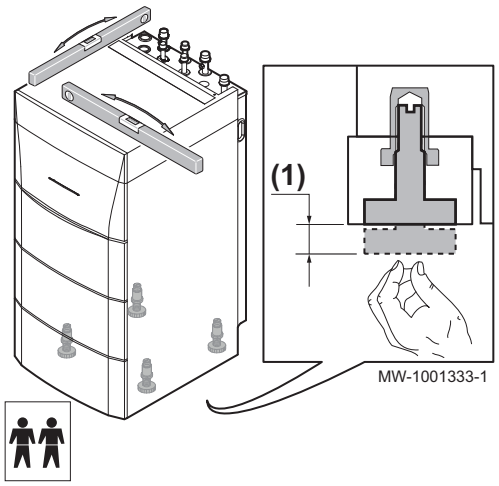

(1) Adjustment range: 0 to 20 mm

Minimum requirement: unscrew the foot by at least 10 mm.

6.5 Removing the top panel and the front panels

To prepare the installation, open the appliance.

Fig.21

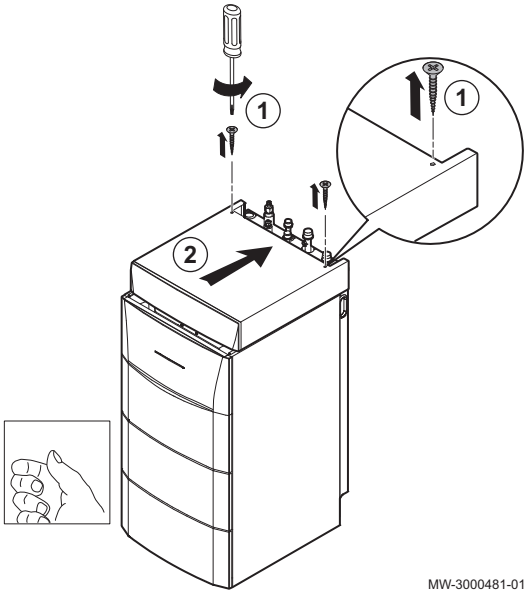

1. Unscrew the two screws from the top panel.

Important
Retain the 2 toothed washers. During the reinstallation of the top panel, the toothed washers act to ground the unit.

2. Push the top panel towards the back.

Fig.22

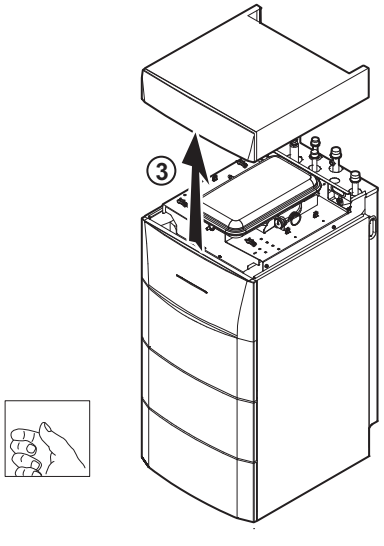

3. Raise the top panel.

Fig.23

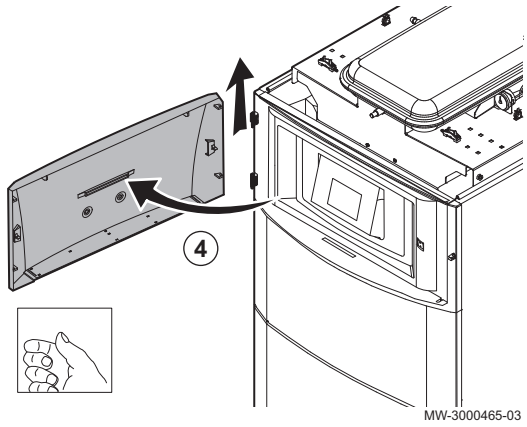

4. Open and remove the user interface access door

Fig.24

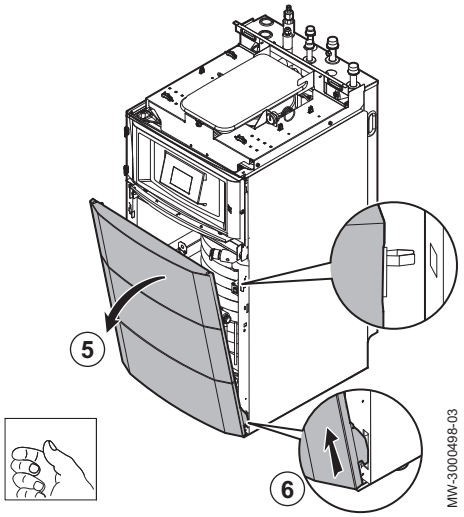

5. Pivot the front panel towards you by pulling firmly on both sides.
6. Remove the front panel by pulling firmly upwards.

Fig.25

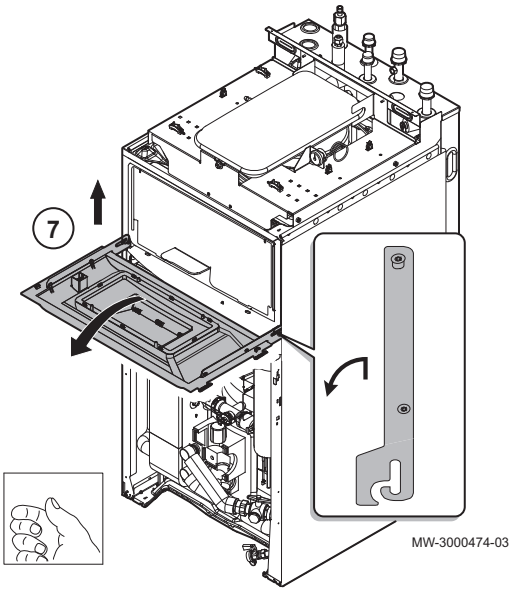

7. Lift the control system module bracket, tilt it and hang it in a horizontal position.

Important
Keep a good hold of the user interface module in order not to pull out or disconnect the electrical connections in the user interface module.

8. To reassemble the appliance, reassemble the pieces in the reverse order.

6.6 Reversing the opening direction of the user interface door

As standard, the user interface access door opens to the left. To open the door to the right, proceed as follows:

1. Access the user interface by unscrewing the top panel and removing the door.

Fig.26

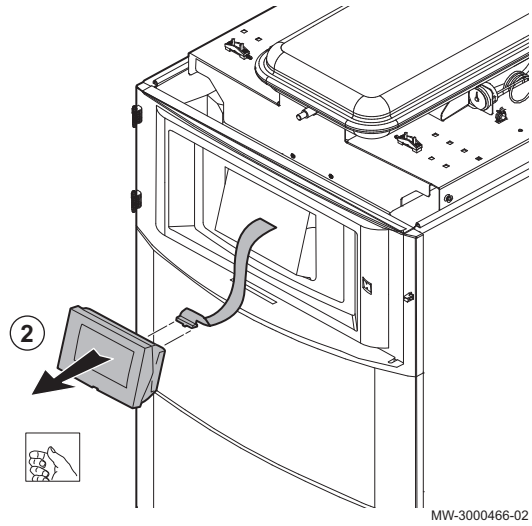

2. Take the user interface module out of its housing and disconnect it.

Fig.27

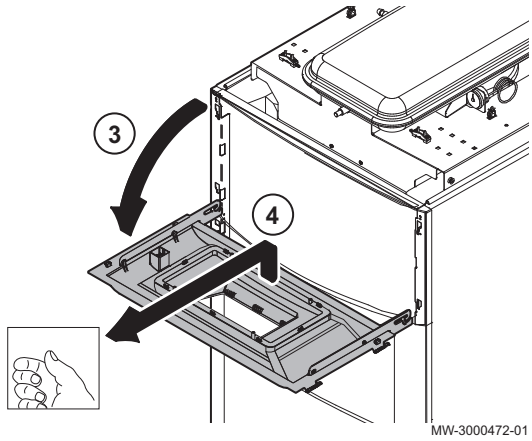

3. Lift and pivot the control system module bracket.
4. Remove the user interface support.

Fig.28

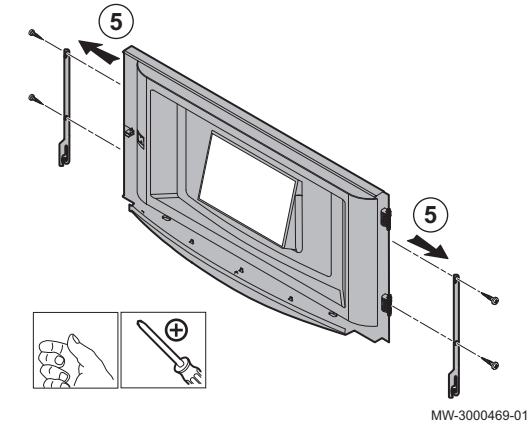

5. Unscrew the four lateral holding screws and remove the side hooks.

Fig.29

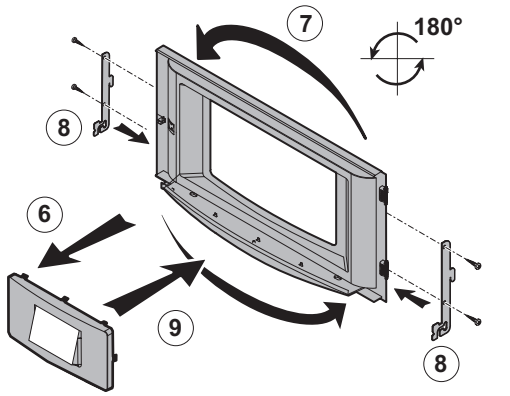

6. Unclip the control module bracket.
7. Pivot the control system module bracket by 180° and put it back in place.
8. Refit the side hooks and put the screws back in place.
9. Clip the control module bracket back in place.
10. To reassemble the assembly, proceed in reverse order to disassembly.

6.7 Putting the outdoor unit in place: precautions

Caution
The models concerned are as follows:

- MONO AWHP 11 TR

Remove the components used to support the compressor during transport.

Failure to perform this operation may result in an increase in the appliance's operating noise.

See
Outdoor unit manual

6.8 Hydraulic connections

6.8.1 Connections

Fig.30 Connections possible on the indoor unit side

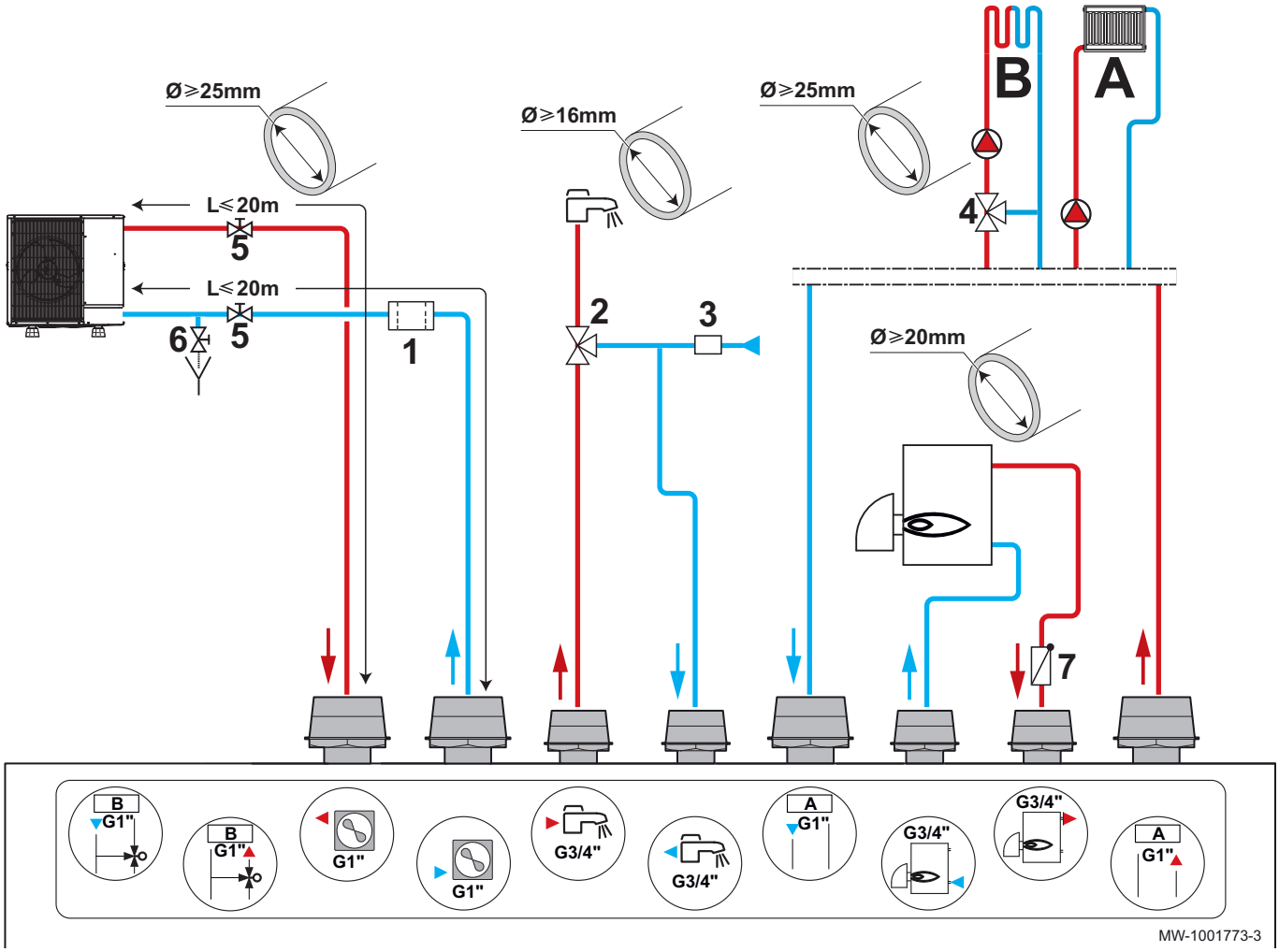

A Direct heating circuit
B Second heating circuit with mixing valve
1 Sieve filter
2 Thermostatic mixing valve
3 Safety unit
4 Mixing valve
5 Stop valve
6 Antifreeze valve or drain valve
7 Non-return valve

Important

- Connect the options before the indoor unit is put into its final position.
- For an installation with 2 heating circuits, fit the kits by connecting the circuit that requires the highest temperature to circuit A, and the circuit that requires the lowest temperature to circuit B.
- Ensure that each of the two circuits can guarantee the minimum flow rate.
- Calculate the volume of water in the heating circuit and check the volume of the appropriate expansion vessel using the NF DTU 65.11. Use the maximum temperature of the circuit in heating mode or, failing that, a minimum of 55 °C. If the volume of the integrated expansion vessel (8 litre) is not sufficient, add an external vessel to the heating circuit.
- We recommend using a sludge and magnetite separator, e.g WAM C 1½

Tab.23

Circuit		Connections to be made
A Direct heating 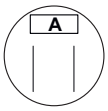	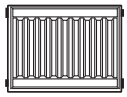 Radiators	**Caution** In case of a direct circuit with radiators fitted with thermostatic valves, install a low loss header tank or a differential valve to guarantee the flow rate. • Install an automatic air vent at the highest point on the heating circuit. • Install two isolation valves. • Install a differential valve if thermostatic valves are present on the radiator circuit.
	 Underfloor heating	**Caution** Fit a low loss header tank or a differential pressure valve to guarantee the flow rate. • Install an automatic air vent at the highest point on the heating circuit. • Install two isolation valves. • Connect the safety thermostat on the circulating pump.
B Second mixing zone 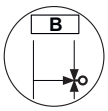	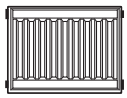 Radiators	**Caution** In case of a direct circuit with radiators fitted with thermostatic valves, install a low loss header tank or a differential valve to guarantee the flow rate. • Install an automatic air vent at the highest point on the heating circuit. • Install two isolation valves. • Install the second circuit control PCB kit. • Install the second circuit kit with mixing valve.
	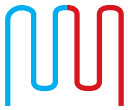 Underfloor heating	**Caution** Fit a low loss header tank or a differential pressure valve to guarantee the flow rate. • Install an automatic air vent at the highest point on the heating circuit. • Install two isolation valves. • Connect a safety thermostat to the SCB-04 PCB. • Install the second circuit control PCB kit. • Install the second circuit kit with mixing valve.
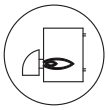 Backup boiler		• Install the $^{3}/_{4}$” non-return valve and the $^{3}/_{4}$” nipple to the boiler return (supplied in the accessories bag). • Install a filter on the boiler outlet (not provided).
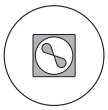 Outdoor unit		• Install a 400 µm filter on the outdoor unit inlet (not provided). This filter is located in an isolating valve. • Install an antifreeze valve or a device comprising a manual drain valve and isolation valves.
 Domestic hot water		• Fit a domestic water thermostatic mixing valve (not supplied) on the domestic hot water outlet. • Fit a safety unit on the domestic hot water inlet.

Safety unit

Fig.31

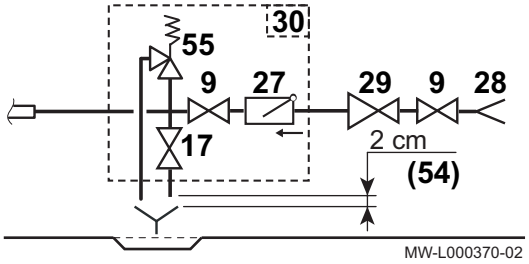

9 Isolation valve
17 Drain valve
27 Non-return valve
28 Domestic cold water inlet
29 Pressure reducer
30 Safety unit
54 End of the discharge pipe free and visible 2 to 4 cm above the flow funnel
55 Safety valve 0.7 MPa (7 bar)

The Netherlands: Safety valve 0.6 MPa (6 bar) or 0.8 MPa (8 bar)

6.8.2 Special precautions for connecting the heating circuit

Caution
Hold the connection at the indoor unit end with a spanner to avoid twisting the pipe inside the appliance.

Caution
The hydraulic installation must be capable of handling a minimum flow rate at all times:

- If radiators are connected directly to the heating circuit, install a differential valve between the indoor unit and the heating circuit.
- Otherwise, leave the heating circuit without a thermostatic valve and/or without a solenoid valve.
- Fit drain valves between the indoor unit and the heating circuit.

- When making the connection, always comply with the applicable local standards and directives.
- Ensure that the EPDM sealing elements do not come into contact with substances containing mineral oil. Products containing mineral oil will cause permanent serious damage to the material, causing it to lose its impermeability.
- If components made from composite materials are used (for example, polyethylene connection pipes or flexible hose), we recommend components with an anti-oxygen barrier.

Minimum water volume

The volume of water in the installation must be sufficient to avoid short cycle operation and to enable defrosting.

Tab.24

Minimum water volume (l)	MONO AWHP 6 MR	MONO AWHP 8 MR	MONO AWHP 8 TR	MONO AWHP 11 TR
Underfloor heating type installation (30-35 °C)	33	33	33	37
Fan coil unit type installation (40-45 °C)	11	18	18	28
Radiator type installation (47-55 °C)	12	16	16	25

Volume of the expansion vessel

Use the maximum temperature of the circuit in heating mode or, failing that, a minimum temperature of 55 °C.

Tab.25 Underfloor heating type installation: maximum temperature of 40 °C

Static height (m)	Expansion vessel inflation pressure (bar)	Volume of the expansion vessel depending on the volume of the installation (l)							
		75	100	125	150	175	200	225	250
5	1	7	7	8	8	8	9	9	9
10	1.3	7	8	8	9	9	10	10	11
15	1.8	10	10	11	11	12	13	13	14

6.8.3 Special precautions for the connection of the domestic hot water circuit

Tab.27

Domestic cold water connection	• Install a water drain in the boiler room and a funnel-siphon for the safety unit. • Fit a non-return valve to the domestic cold water circuit. **Important** Make the connection to the cold water supply according to the hydraulic installation diagram. **Important** The components used for the connection to the cold water supply must comply with the prevailing standards and regulations in the country concerned.
Temperature limit at the draw-off point	• The maximum domestic hot water temperature at the draw-off point is subject to special regulations in the various countries in which the appliance is sold in order to protect the user. These special regulations must be observed when installing the appliance.
Water operating pressure	• The tanks on our domestic hot water heaters can run at a maximum operating pressure of 1.0 MPa (10 bar). The recommended operating pressure is under 0.7 MPa (7 bar).
Safety valve	• Integrate the safety valve in the cold water circuit. • Install the safety valve close to the tank in a place with easy access.
Domestic safety unit	• The safety unit and its connection to the domestic hot water tank must be of at least the same diameter as the domestic cold water supply pipes on the tank's DHW circuit. • There must be no cut-off devices between the safety valve or unit and the domestic hot water tank. • The discharge pipe from the safety unit must have a continuous and sufficient gradient, and its cross section must be at least equal to the cross section of the opening of the safety unit outlet (to prevent the flow of water being hindered if the pressure is too high). • The outlet pipe in the safety valve or unit must not be blocked. • Fit the safety valve above the domestic hot water tank to avoid draining the tank during servicing. Install a drain valve at the bottom of the domestic hot water tank, if necessary.
Isolation valves	• Hydraulically isolate the primary and domestic circuits with isolation valves to facilitate maintenance on the domestic hot water tank. The valves make it possible to carry out maintenance on the domestic hot water tank and its components without draining the entire installation. • These valves are also used to isolate the domestic hot water tank when conducting a pressurised check on the leak-tightness of the installation if the test pressure is greater than the admissible operating pressure for the domestic hot water tank.

6.8.4 Connecting the safety valve drain pipe

Fig.32

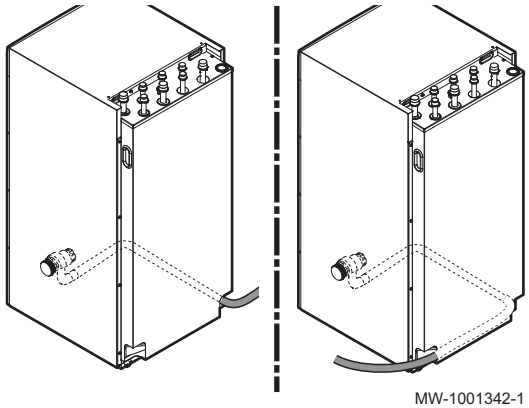

MW-1001342-1

1. Connect the drain pipe to the waste water discharge.

Caution
The safety valve drain pipe must not be obstructed.

Caution
The drain pipe can be installed on the right or left.

Caution
If the gradient is not sufficient for the outflow, use a condensate pump.

6.9 Electrical connections

6.9.1 Recommendations

Warning
- Only qualified professionals may carry out electrical connections, always with the power off.
- Earth the appliance before making any electrical connections.

Caution
- The installation must be fitted with a main switch.
- Three phase models must always be fitted with neutral.

Caution
Power the appliance via a circuit that includes an omnipolar switch with contact opening distance of 3 mm or more.
- Single phase models: 230 V (+6%/-10%) 50 Hz
- Three-phase models: 400 V (+6%/-10%) 50 Hz

Caution
Secure the cable with the cable clamp provided. Be careful that you do not invert any of the wires.

- Make the electrical connections on the appliance in accordance with the requirements of the prevailing standards,
- Make the electrical connections on the appliance in accordance with the information given in the electrical schematics delivered with the appliance,
- Make the electrical connections on the appliance in accordance with the recommendations of these instructions.

Important
Electrical conformity for earthing:
- **Belgium**: RGEI standard
- **Netherlands**: NEN 1010 standard
- **Other countries**: Prevailing installation standards

When making electrical connections to the mains, respect the following polarities.

Tab.28

Colour of the wire	Polarity
Brown wire	Live
Blue wire	Neutral
Green/yellow wire	Earth

6.9.2 Electrical sizing

The electrical characteristics of the mains power supply available must correspond to the values given on the data plate.

Carefully determine the cables according to the following elements:

- Minimum cable cross sections, indicated on the figure.
- Maximum amperage of the outdoor unit.
- Distance of the appliance from the original power supply.
- Upstream protection.
- Neutral operating conditions.

Fig.33 MONO AWHP 6 MR/MONO AWHP 8 MR/MONO AWHP 11 MR

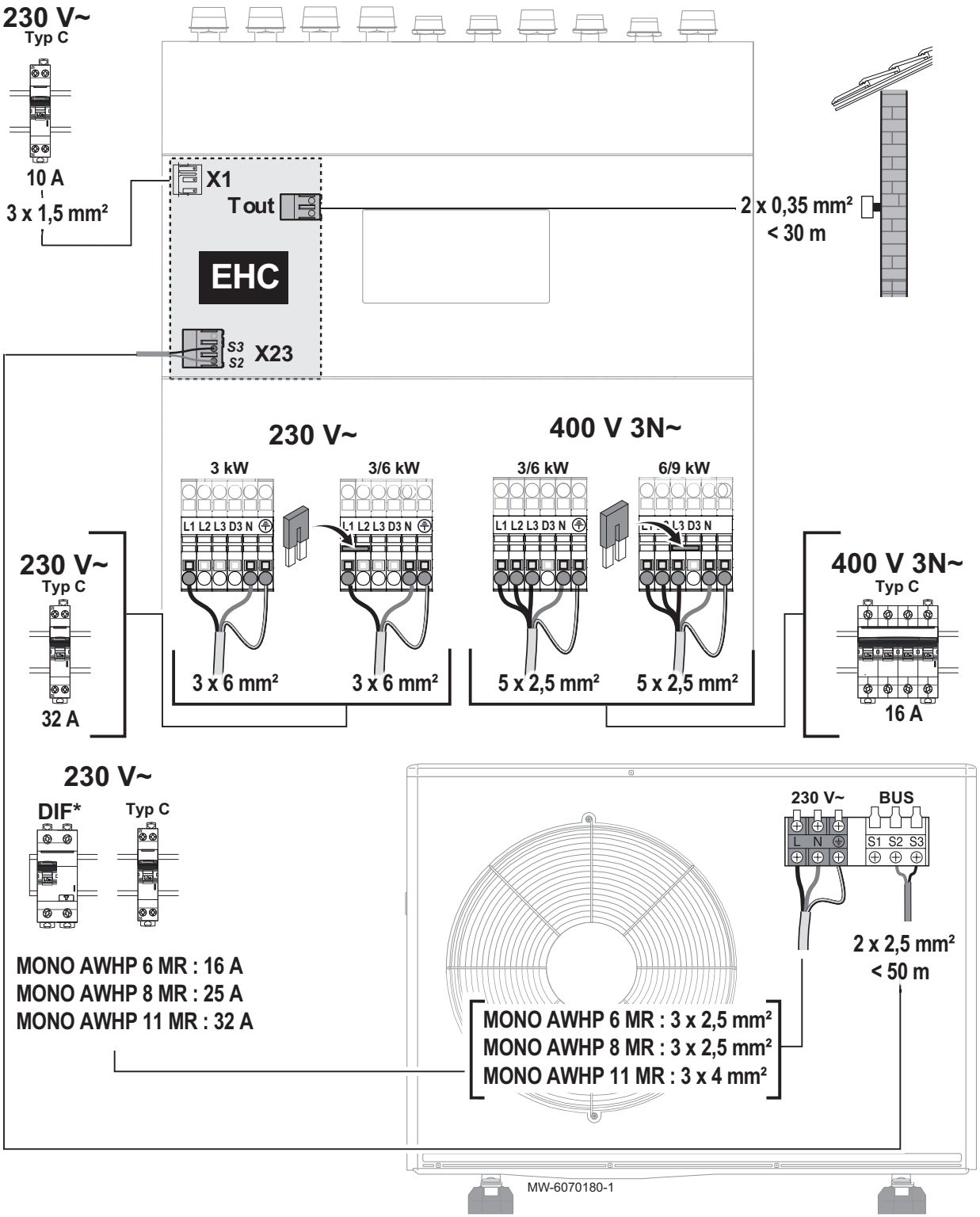

EHC Indoor unit EHC–04 PCB
T out Terminal block for outdoor temperature sensor
X23 Indoor unit communication bus connection terminal block
BUS Outdoor unit communication bus connection terminal block
Type C Curve C circuit breaker
DIF* Residual current circuit breaker (RCCB)

Fig.34 MONO AWHP 8 TR/MONO AWHP 11 TR

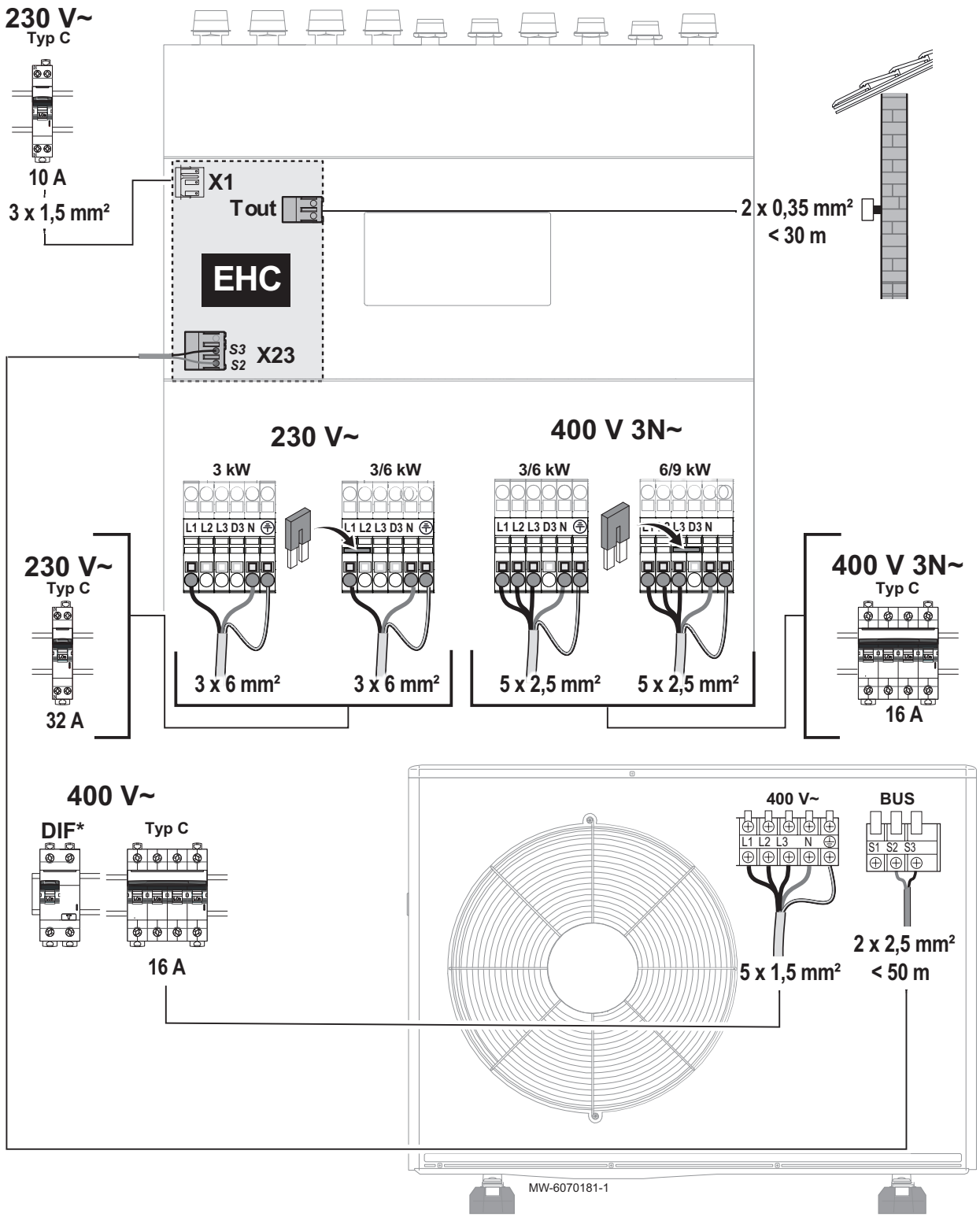

EHC Indoor unit EHC–04 PCB
T out Terminal block for outdoor temperature sensor
X23 Indoor unit communication bus connection terminal block
BUS Outdoor unit communication bus connection terminal block
Type C Curve C circuit breaker
DIF* Residual current circuit breaker (RCCB)

Use compatible residual current circuit breakers (RCCB). Refer to the table below.

Important
The RCCB for the "inverter" outdoor unit must be compatible with high harmonics.

Tab.29

Appliance	Power supply type	Maximum amperage (A)	Recommended residual current circuit breaker (RCCB)
Eria MB EL	Single phase	–	30 mA, type A
3 kW electric heater	Single phase	13	30 mA, type A
3/6 kW electric heating element	Single phase	26	30 mA, type A
3/6 kW electric heating element	Three phase	15	30 mA, type A
3/9 kW electric heating element	Three phase	22.5	30 mA, type A
MONO AWHP 6 MR	Single phase	13	Type B, 30 mA
MONO AWHP 8 MR	Single phase	22	Type B, 30 mA
MONO AWHP 8 TR	Three phase	11.5	Type B, 30 mA
MONO AWHP 11 TR	Three phase	13	Type B, 30 mA

6.9.3 Accessing the PCBs

Fig.35

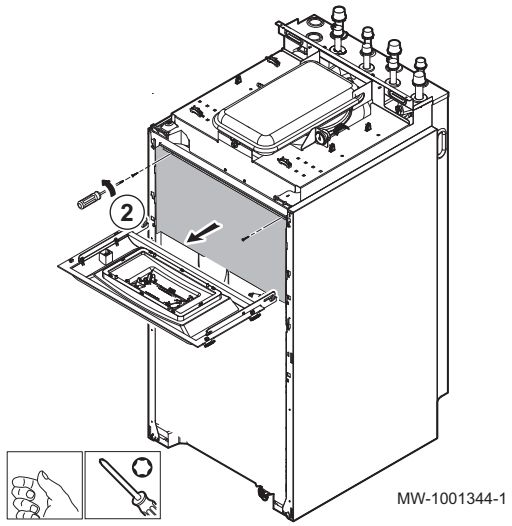

1. Disassemble the indoor module.
2. Unscrew the two screws on the protective cover for the PCBs.

6.9.4 Routing the cables

Caution
Separate the sensor cables from the 230/400 V circuit cables. Attach all the cables to the upper panel using one of the cable clamps provided in the accessories bag.

Fig.36

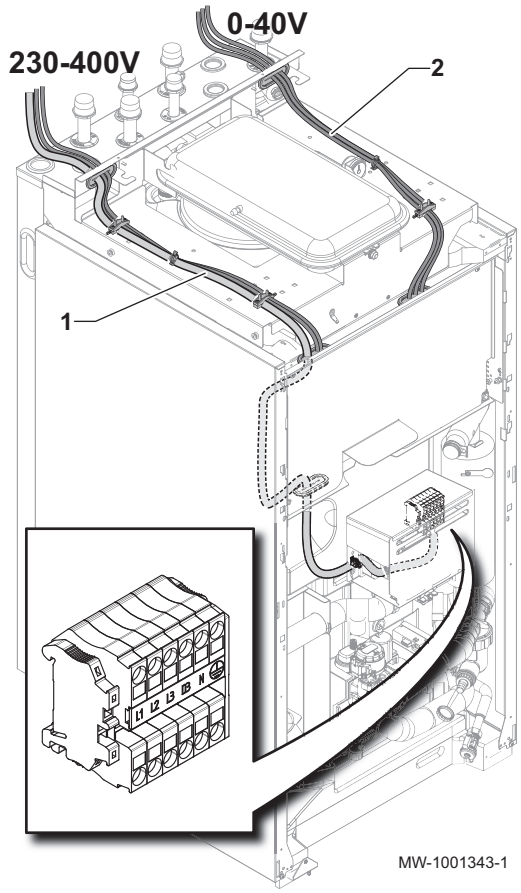

1 230 - 400 V circuit cables
2 0 - 40 V sensor cables

6.9.5 Description of the connection terminal blocks

■ EHC–04 PCB terminal block

Fig.37

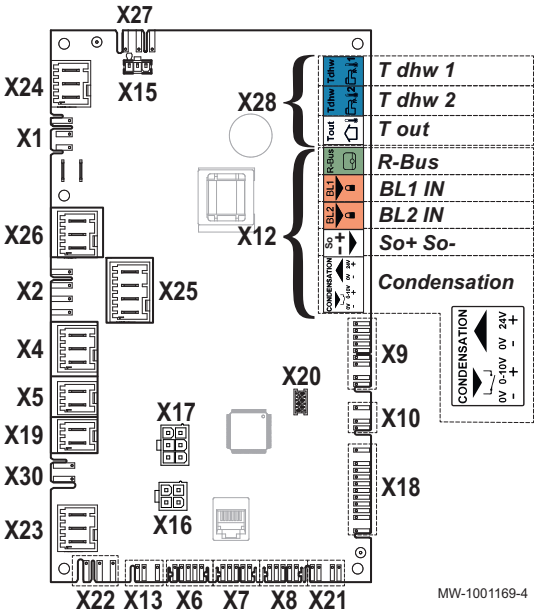

- **X1** 230 V - 50 Hz power supply
- **X2** Main circulating pump
- **X4** - Electric version: backup electric heater - stage 1
- **X5** - Electric version: backup electric heater - stage 2
- **X7** L-Bus to the SCB-04 PCB
- **X8** Indoor unit user interface
- **X9** Sensors
- **X10** Main circulating pump command signal
- **X12** Options
  - R-Bus: eTwist smart room thermostat, on/off thermostat, modulating thermostat or OpenTherm thermostat
  - BL1 IN / BL2 IN: multifunction inputs
  - So+/So- : electrical energy meter
  - Condensation: condensation sensor for underfloor cooling
- **X15** 230 V power supply for the SCB-04 PCB and the PAC IF020–E PCB
- **X16** Not used
- **X17** Not used
- **X18** Input/output for the PAC IF020–E PCB
- **X19** Optional connection cable for Silent mode
- **X22** Bus connection to the PCB managing the PAC IF020–E outdoor unit
- **X23** Outdoor unit bus connection
- **X24** Not used
- **X25** Heating / Domestic hot water directional valve
- **X26** Circulating pump - only if connecting a buffer tank. The circulating pump power is limited to 450 W.
- **X27** Main circulating pump
- **X28**
  - T out: outdoor temperature sensor
  - T dhw 1: temperature sensor at the top of the domestic hot water tank
  - T dhw 2: temperature sensor at the bottom of the domestic hot water tank
- **X30** hydraulic circuit separation kit (glycol kit) option - connection of the glycol pump

■ SCB-04 PCB terminal block option

Fig.38

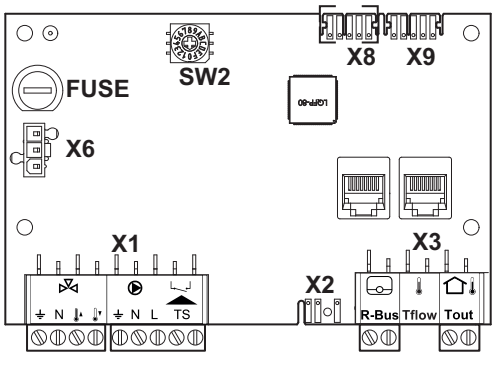

- **X1** Circulating pump / three-way valve / safety thermostat input power supply
- **X2** Circulating pump PWM command signal
- **X3**
  - R-Bus: eTwist connected room thermostat, on/off thermostat, OpenTherm thermostat
  - Tflow: flow sensor
  - Tout: do not connect anything
- **X6** 230 V power supply
- **X8** L-Bus to the EHC–04 PCB
- **X9** L-Bus terminal connector

■ ACI-BDR PCB terminal block

Fig.39

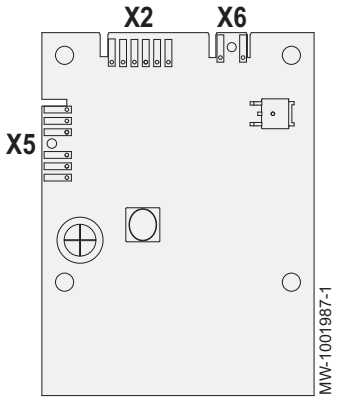

X2 L-BUS between the EHC–04 PCB and the TAS impressed current titanium anode
X5 not used
X6 not used

6.9.6 Connecting the outdoor unit bus

Fig.40

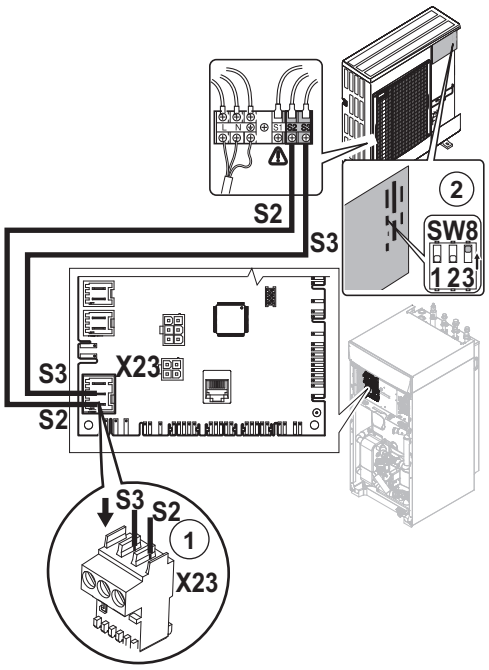

1. Connect the outdoor unit bus between the S2 and S3 terminals on the **X23** connector in the indoor unit's **EHC–04** central unit PCB.
   Do not connect anything to S1.
2. Set the **SW8–3** switch on the outdoor unit PCB to **ON**.

Important
The outdoor unit must have a separate electrical power supply and a dedicated circuit breaker.

6.9.7 Connecting the outdoor temperature sensor

The connection of an outdoor temperature sensor is mandatory to ensure the correct operation of the appliance.

Fitting the outdoor temperature sensor

Fig.41

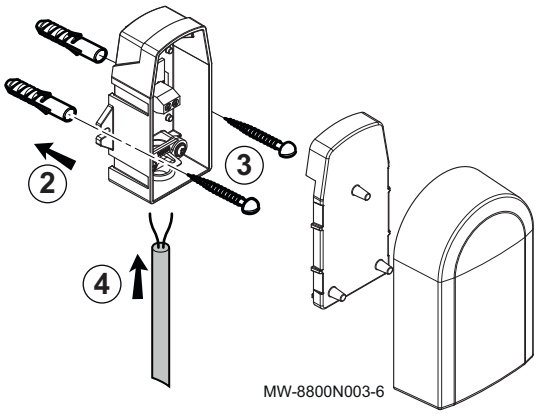

Plugs diameter 4 mm/drill diameter 6 mm

1. Choose a recommended location for the outdoor sensor.
2. Put the 2 plugs in place, delivered with the sensor.
3. Secure the sensor using the screws provided (diameter 4 mm).
4. Connect the cable to the outdoor temperature sensor.

Recommended positions

Place the outside sensor in a position that covers the following characteristics:

- On a façade of the area to be heated, on the north if possible.
- Half way up the wall of the area to be heated.
- Under the influence of changes in the weather.
- Protected from direct sunlight.
- Easy to access.

Fig.42

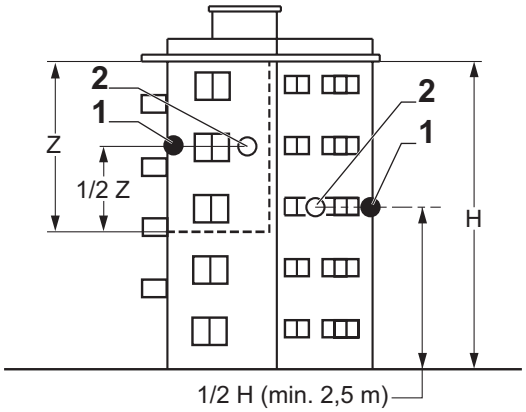

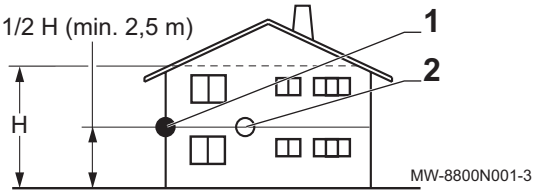

1 Optimum location
2 Possible position

H Inhabited height controlled by the sensor
Z Inhabited area controlled by the sensor

Positions to be avoided

Avoid placing the outside sensor in a position with the following characteristics:

- Masked by a building element (balcony, roof, etc.).
- Close to a disruptive heat source (direct sunlight, chimney, ventilation grid, etc.).

Fig.43

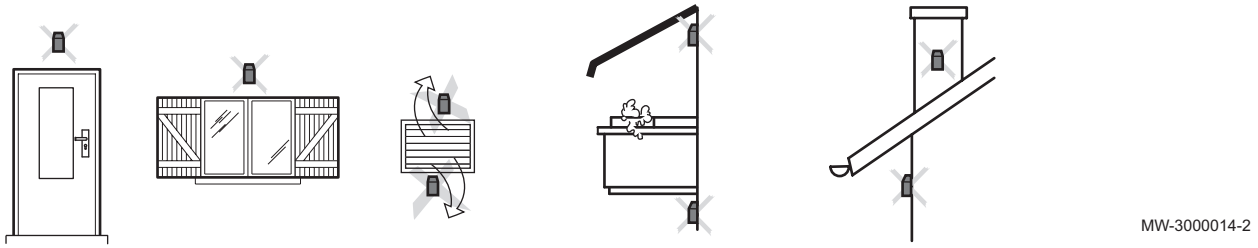

■ Connecting the outdoor sensor

To connect the outdoor sensor, use a cable with a minimum cross-section of 2 x 0.35 mm^2 and a length < 30 m.

Fig.44

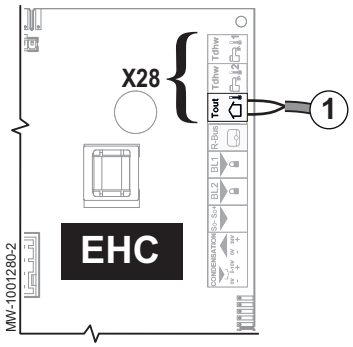

1. Connect the outside sensor to the **Tout** input on the **X28** connector on the indoor unit **EHC–04** central unit PCB.

6.9.8 Connecting a backup heater

Connecting a backup heater guarantees user comfort and heat pump safety. If no backup is connected, heating comfort and protection of the appliance against frost cannot be guaranteed.

Depending on the indoor unit model, the backup heater may be a backup boiler or an electric heating element.

■ Accessing the indoor unit terminal blocks

Fig.45

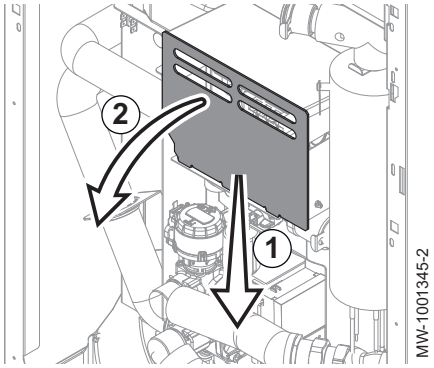

1. Press down on the protective flap on the electrical backup terminal block.
2. Remove the protective cover.

■ Connect the power supply for the immersion heater (electrical backup)

The immersion heater has its own power supply, with a dedicated circuit breaker. The immersion heater can be connected using a single-phase or three-phase power supply. For the single-phase power supply, you can use a 230V phase on a three-phase electric panel, in compliance with the applicable standards.

1. Select the maximum output for the electrical backup based on the size of the home and its energy performance class: between 3 and 6 kW in single-phase, or between 6 and 9 kW in three-phase.
2. Feed the electrical backup power supply cable into the cable duct reserved for the 230- / 400-V circuit cables.

Fig.46 Single-phase power supply

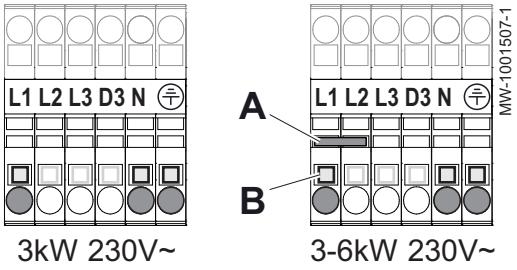

Fig.47 Three-phase power supply

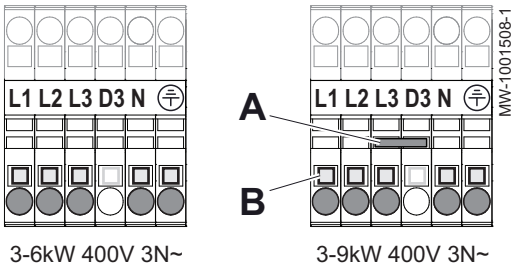

3. Connect the power supply and change the bridge if necessary. It is possible to connect the backup to one of the 3 phases of a three-phase installation, if necessary.

Important
The bridge can be found in a bag inside the indoor unit.

Tab.30 Bridging for single-phase power supply

Maximum output	Bridge to be installed
3 kW	Do not install a bridge
6 kW	Put the bridge **A** in place

Tab.31 Bridging for three-phase power supply

Maximum output	Bridge to be installed
6 kW	Do not install a bridge
9 kW	Put the bridge **A** in place

A Bridge
B Orange button (push to enable insertion or removal of the wire)
L1 Live 1
L2 Live 2
L3 Live 3
N Neutral
⏚ Earth

There are 2 output stages, as shown in the following table.

- The minimum output is stage 1 on the immersion heater. It is used if a small amount of additional energy is sufficient to increase the temperature of the heating circuit.
- The maximum output uses stage 1 and adds a stage 2 for the immersion heater. Stage 2 only operates in conjunction with stage 1. It is used when stage 1 was not able to bring the heating circuit to a sufficiently high temperature.

Tab.32 Electrical backup power supply

Backup power supply	Output of the electrical backup		
	Maximum output = stage 1 + stage 2	Minimum output = stage 1	Stage 2
Single phase	3 kW = 3 kW + 0 kW	3 kW	0 kW
	6 kW = 3 kW + 3 kW	3 kW	3 kW
Three-phase	6 kW = 3 kW + 3 kW	3 kW	3 kW
	9 kW = 3 kW + 6 kW	3 kW	6 kW

6.10 Filling the system

See also

Protecting the outdoor unit from frost with a manual drain solution, page 115

6.10.1 Clean and flush the installation

Caution
To prevent impurities getting into the expansion vessel, it is recommended that the expansion vessel is separated during the flushing and filling phases.

Flush the installation to evacuate any particles that may damage certain devices such as safety valves, pumps, valves, etc.

■ Flushing new installations and installations less than 6 months old

Before filling the heating installation, it is essential to remove any debris (copper, caulking, soldering flux) from the installation.

1. Clean the installation with a powerful universal cleaner.
2. Flush the installation with at least 3 times the volume of water contained in the central heating system (until the water runs clear and shows no impurities).

■ Flushing an existing installation

Before filling the heating installation, it is essential to remove any sludge deposits which have accumulated in the heating circuit over the years.

1. Remove any sludge from the installation.
2. Flush the installation with at least 3 times the volume of water contained in the central heating system (until the water runs clear and shows no impurities).

6.10.2 Filling the heating circuit

Check that the installation has been cleaned and flushed correctly, then fill up the installation.

Important

- The use of glycol to fill the heating circuit is formally prohibited.
- The use of glycol in the heating circuit invalidates the warranty.

1. Fill the installation until the pressure reaches between 1.5 and 2 bar inclusive. Read the pressure on the mechanical pressure gauge.

Important

The mechanical pressure gauge, situated under the top panel, close to the expansion vessel, is only used when filling the indoor unit with water. After the heat pump is switched on, the pressure will be shown on the display.

2. Check that there are no leaks.
3. Completely vent the indoor unit and the installation to ensure optimal running.

■ Treatment of the heating water

In many cases, the heat pump and the heating system can be filled with mains water, without treating the water.

Caution

Do not add any chemical products to the heating water without first consulting a water treatment specialist. For example: antifreeze, water softeners, products to increase or reduce the pH value, chemical additives and/or inhibitors. These may cause faults in the heat pump and damage the heat exchanger.

The water in the installation must comply with following characteristics:

Tab.33 Heating water specifications

Specifications	Unit	Total system output
		≤ 70 kW
Potential of hydrogen (pH)	-	7.5 - 9
Conductivity at 25°C	µS/cm	10 to 500
Chlorides	mg/litre	≤ 50
Other components	mg/litre	< 1
Total water hardness	°f	7 - 15
	°dH	4 - 8.5
	mmol/l	0.7 - 1.5

If water treatment proves necessary, Remeha recommends the following manufacturers:

- Cillit™
- CLimalife®
- Fernox
- Permo
- Sentinel®

6.10.3 Fill the domestic hot water circuit

1. Flush the domestic water circuit with at least 20 times its volume of water.
2. Turn on a hot water tap.
3. Fill the domestic hot water tank via the cold water inlet pipe, leaving a hot water tap open.
4. Turn off the hot water tap when the water flow is regular, and there is no noise in the pipes.
5. Check for any water leaks.
6. Degas all of the domestic hot water pipes by repeating steps 2 to 5 for each hot water tap in the installation.

Important
Carefully degas the domestic hot water tank and the distribution network in order to eliminate noises and hammering caused by trapped air moving in the pipes during draw-off.

7. Check the safety devices (particularly the safety valve or safety unit), referring to the instructions provided with those components.

Domestic water quality

In regions where the water is very hard (Th > 20 °fH (11 °dH)), we recommend fitting a softener.

The water hardness must always be between 12 °fH (7 °dH) and 20 °fH (11 °dH) to be capable of providing effective protection against corrosion.

The softener does not bring about a derogation from our warranty provided that it is approved and set in accordance with the codes of practice and the recommendations given in the instructions for the softener, and is regularly inspected and maintained.

6.10.4 Filling and flushing the HK72 hydraulic circuit separation kit (glycol kit)

Use the HK72 hydraulic circuit separation kit (glycol kit) to protect the installation from freezing.

Important
See the instructions in the user manual for the HK72 hydraulic circuit separation kit (glycol kit) for filling and flushing.

7 Commissioning

7.1 General

The commissioning procedure for the heat pump is performed:

- the first time it is used,
- after a prolonged shutdown.

Commissioning of the heat pump allows the user to review the various settings and checks to be made to start up the heat pump in complete safety.

7.2 Checklist before commissioning

7.2.1 Checking the heating circuit

1. Check the volume of the expansion vessel(s) is sufficient for the volume of water in the heating installation.
2. Check the inflation pressure of the expansion vessel(s).
3. Check that the heating circuit contains the correct amount of water. If necessary, top up with more water.
4. Check that the water connections are leak-tight.
5. Check that the heating circuit has been correctly purged.
6. Check that the filters are not clogged. Clean them if necessary.
7. Check that the valves and thermostatic radiator valves are open.
8. Check that all settings and safety devices are working correctly.

7.2.2 Checking the electrical connections

1. Check the mains electricity connection to the following components:
   - Outdoor unit
   - Indoor unit
   - Immersion heater
2. Check the bus cable between the indoor unit and the outdoor unit:
   - Cable with double insulation
   - Cable separated from power supply cables
   - Cable correctly connected on both sides
3. Check the compliance of the circuit breakers and residual current devices (RCD) used:
   - Circuit breaker and residual current device (RCD) of the outdoor unit
   - Indoor unit circuit breaker
   - Immersion heater circuit breaker
4. Check the positioning and connection of the sensors:
   - Outdoor temperature sensor
   - Room temperature sensor (if present)
   - Flow sensor for the second circuit (if present)
5. Check the connection of the circulating pump(s).
6. Check the connection of the different options.
7. Check that the wires and terminals are properly tightened or connected to the terminal blocks.
8. Check the separation of the 230V/400V power cables and extra-low voltage cables.
9. Check the connection of the underfloor heating safety thermostat (if used).
10. Check that traction arrester devices are used for all cables exiting the appliance.

7.3 Commissioning procedure with smartphone

Caution
Commissioning must only be performed by a qualified professional.

We have created a smartphone application to help you commission and configure the parameters for the heating installation.

Fig.48

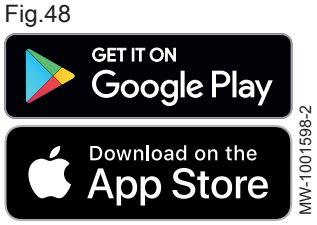

1. Download the **Remeha Smart Start App** application from **Google Play** or from the **App Store**.
2. Switch on the appliance.
3. Check that the **Bluetooth®** function is activated on the heat pump.
4. Follow the application's instructions on the smartphone for commissioning and configuring the heating installation. To establish the **Bluetooth®** connection between the smartphone and the heat pump, use the information given on the **Bluetooth®** label.

Once the procedure is complete, your installation is fully configured.

7.4 Commissioning procedure without smartphone

Caution
Initial commissioning must be performed by a qualified professional.

1. Refit all the panels, fascias and covers on the indoor unit and outdoor unit.
2. Arm the indoor unit and outdoor unit circuit breakers on the electric panel by setting them to the **I** position.
3. If necessary, arm the electrical backup circuit breaker on the electrical panel by setting it to the **I** position.
4. Switch on the heat pump and press the ON/OFF switch.
   ⇨ The heat pump is switched on. The **Welcome** message is displayed.
5. Select **the country and language**.
6. Set **the date and time**.

Fig.49

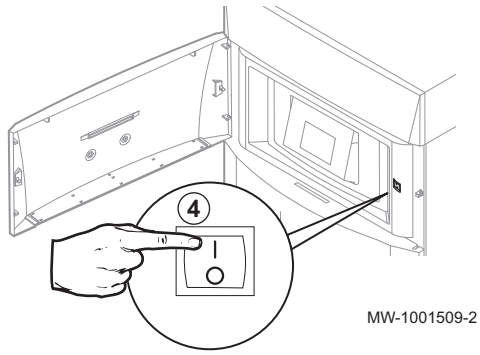

Fig.50

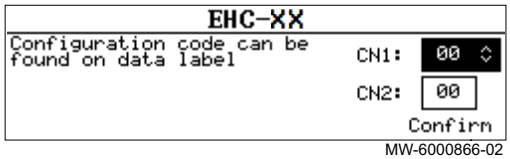

7. Configure the **Enable daylight save** function.
8. Set the **CN1** and **CN2** parameters. The values are available on the data plate of the indoor unit.
   The **CN** parameters are used to indicate the type of outdoor unit and the backup type present on the installation.
9. Select **Confirm** to save the settings.
10. The heat pump begins its vent cycle.

Points to check:

- After commissioning, domestic hot water production takes priority. Keep this operating mode to increase the temperature and check that the heat pump is operating correctly.
-
- At the end of the vent cycle, if the heat pump does not start, check the flow temperature on the user interface. The flow temperature must be above 10 °C to enable the outdoor unit to start. This protects the condenser during defrosting.
  If the flow temperature is below 10 °C, the backups start instead of the outdoor unit. The outdoor unit takes over when the flow temperature reaches 20 °C.

Fig.51 Reading the flow temperature

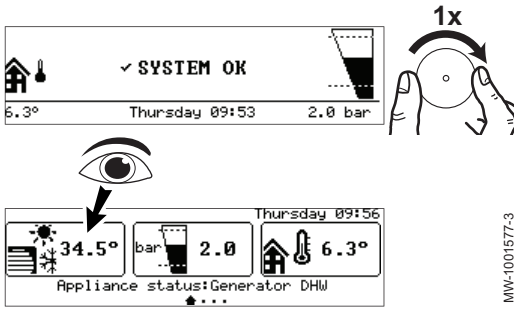

7.4.1 Resetting the configuration numbers

If you have replaced the PCB or made an error during setting, you must reset the configuration numbers CN1 and CN2. Thanks to these numbers, the system recognises the type of outdoor unit and type of backup present on the installation.

To reset the configuration numbers:

1. Press the ☰ button.
2. Select **Installer**.
3. Select **Advanced menu > Set configuration code > EHC–04**.
4. Set the **CN1** and **CN2** parameters. The values are available on the data plate of the indoor unit.
5. Select **Confirm** to save the settings.

7.4.2 Configuration numbers CN1 and CN2

The parameters **CN1** and **CN2** enable the heat pump to be configured according to the output of the outdoor unit and the type of backup (immersion heater or backup boiler) installed.

Tab.34

Output of the outdoor unit	CN1 Backup boiler	CN2
6 kW	21	11
8 kW	22	11
11 kW	23	11

7.5 Setting the flow rate of the direct circuit

Heating installations must be able to guarantee a minimum flow rate at all times. If the flow rate is too low, the heat pump may shut itself down for its own protection; the heating, cooling and domestic hot water functions are then no longer ensured.

- For installations with underfloor heating, check that the collector valves open. Check that the measured flow rate is close to the target flow rate value, depending on the output of the outdoor unit.
- For an installation with radiators, set the flow rate using the compulsory pressure actuated bypass valve.

1. If there is a second circuit, set it to frost protection mode to shut down the heat demand.
2. Close the thermostatic valves on all of the Zone1 radiators.
3. Follow the access path below.

Access path
> Installer > Signals > Air Src Heat Pump

4. Access the measurement of the water flow rate in the circuit in heating mode:

Parameter	Description
Water flow rate AM056	Wate flow rate in the system

5. Bring the value **Water flow rate** AM056 to the target flow rate by adjusting the differential pressure valve.

	Unit	MONO AWHP 6 MR	MONO AWHP 8 MR	MONO AWHP 8 TR	MONO AWHP 11 TR
Threshold flow rate	l/min	10	12	12	16
Target flow rate	l/min	17	23	23	32

Important
If the flow rate drops below the threshold flow rate, the **Flow rate warning** warning message appears on the home screen.

7.6 Setting the flow rate of the internal second circuit

If an internal second circuit option is used on the appliance, the heating installation must be able to continuously ensure a minimum flow rate on the second circuit only. If the flow rate is too low, the heat pump may shut itself down for its own protection; the heating, cooling and domestic hot water functions are then no longer ensured.

With the use of a low-loss header, there is no need to adjust the flow rate of the second circuit.

1. Set the Zone 1 circuit to frost protection mode to shut down the heating demand.
   ⇨ The circulating pump for the Zone 1 circuit is shut down. If necessary, disconnect the power supply from the pump to ensure it shuts down.
2. Create a heating demand on the Zone 2 circuit.
3. Check that the mixing valve is fully open, by verifying its position.
4. Follow the access path below.

Tab.35

Access path
> Installer > Signals > Air Src Heat Pump

5. Access the measurement of the water flow rate in the circuit in heating mode:

Parameter	Description
Water flow rate AM056	Wate flow rate in the system

6. Bring the value **Water flow rate** AM056 the target flow rate by adjusting the second circuit circulating pump.

	Unit	MONO AWHP 6 MR	MONO AWHP 8 MR	MONO AWHP 8 TR	MONO AWHP 11 TR
Threshold flow rate	l/min	10	12	12	16
Target flow rate	l/min	17	23	23	32

Important
If the flow rate drops below the threshold, the **Flow rate warning** warning message appears on the home screen.

7.7 Final instructions for commissioning

1. Check that the following installation components are switched on correctly:
   - Circulating pumps
   - Outdoor unit
   - Backup electric heater or backup boiler depending on the type of installation
2. Check the flow rate in the installation. It must be above the minimum threshold.
3. Check the setting of the temperature limiting device, for example the thermostatic mixing valve (for domestic hot water production).
4. Shut down the heat pump and carry out the following operations:
   - After about 10 minutes, vent the air in the heating system.
   - Check the hydraulic pressure on the user interface. If necessary, top up the water level in the heating system.
   - Check the fouling level of the filter(s) present both in the heat pump and on the installation. If necessary, clean the filter(s).
5. Restart the heat pump.
6. Explain the operation of the installation to the user.
7. Hand over all manuals to the user.

8 Settings

8.1 Accessing the Installer level

Fig.52

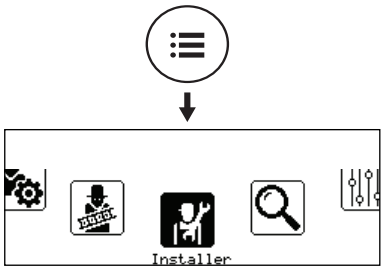

MW-6000891-01

Certain parameters, which may affect the operation of the appliance, are protected by an access code. Only the installer is authorised to modify these parameters.

To access the Installer level:

1. Press the ☰ button until the carousel screen appears.
2. Select **Installer**.

Fig.53

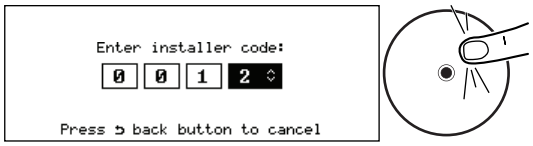

MW-6000892-1

3. Enter the code **0012**.
   ⇨ The Installer level is now activated. All the functions and parameters are accessible.

If no action is taken for 30 minutes, the system will automatically exit the Installer level.

8.2 Searching for a parameter or a measured value

If you know the code for a parameter or a measured value, using the Search function is the easiest way to access it directly.

1. Follow the access path described below.

Access path
☰ > Search

2. Enter the Installer access code (**0012**) if you are prompted to do so.
3. Enter the code for the required parameter or measured value using the ⊙ button.
4. Press the ⊙ button to start the search.
   ⇨ The requested parameter or measured value is displayed.

8.3 Setting the parameters

8.3.1 Setting the circuit function

Set the circuit function based on the constituent components of the heating circuit.

1. Configure the following parameter.

Access path
☰ > Installer > Installation setup > Zone 1 or Zone 2

Tab.36

Parameter	Value	Description
Zone Function CP020	Disable	No circuit connected
	Direct	Direct heating circuit, without mixing valve (e.g. radiators)
	Mixing Circuit	Heating circuit with mixing valve (e.g. underfloor heating)
	Swimming pool	Swimming pool heating
	High Temperature	Circuit heating, even in summer (e.g. heated towel rail)
	Fan Convector	Heating circuit with convection fans
	DHW tank	Heating a domestic hot water storage tank
	Electrical DHW	Controlling the immersion heater on a water heater
	Time Program	Controlling an electrical circuit based on the timer programme
	ProcessHeat	Heating a circuit without a timer programme

2. Select the value that corresponds to the type of circuit selected.

8.3.2 Activating/deactivating the Bluetooth® for the appliance

The installer can enter all the settings via the smartphone application. To do this, activate the **Bluetooth®** function to enable communication between the appliance and the smartphone.

1. Modify the value of the Bluetooth parameter.

Access path
☰ > 🔧 > **Installer** > **Installation setup** > **Bluetooth**

On	**Bluetooth®** activated
Off	**Bluetooth®** deactivated

8.3.3 Resetting or re-establishing the parameters

■ Resetting the configuration numbers

If you have replaced the PCB or made an error during setting, you must reset the configuration numbers CN1 and CN2. Thanks to these numbers, the system recognises the type of outdoor unit and type of backup present on the installation.

To reset the configuration numbers:

1. Press the ☰ button.
2. Select 🔧 **Installer**.
3. Select **Advanced menu > Set configuration code > EHC–04**.
4. Set the **CN1** and **CN2** parameters. The values are available on the data plate of the indoor unit.
5. Select **Confirm** to save the settings.

■ Auto-detecting options and accessories

Use this function after replacing a power circuit board on the heat pump in order to detect all the devices connected to the L–BUS communication bus.

To detect devices connected to the L–BUS communication bus:

1. Press the ☰ button.
2. Select 🔧 **Installer**.
3. Select **Advanced menu > Auto detect**.

4. Select **Confirm** to carry out the auto-detect.

■ Reverting to the factory settings

1. Follow the access path described below.

Access path
☰ > Installer >Advanced menu > Reset to factory settings

2. Select **Confirm** to revert to the factory settings.
   ⇨ The system will restart automatically.

8.3.4 Configuring the service notification

1. Select the desired type of notification.

Access path
☰ > Installer > View service reminder

Type of notification:	Description
None	No service notification
Custom notification	The service notification is displayed after the number of heat pump operating hours.

2. If Custom notification is chosen, select **Service hours mains** (AP011) to set the operating hours before a service notification is issued.

8.4 Configuring the heating circuit

8.4.1 Setting the heating curve

The heating curve is set when the installation is commissioned, thermostatic valves open if necessary. In event of major losses from the building, it is necessary to adjust the gradient of the curve mid-season then mid-winter in increments of 0.1 every 24 hours (building inertia).

To set the heating curve for a zone:

1. Set the following parameters using the ⊙ button:

Access path
☰ > Installer > Installation setup > Zone 1 > Heat curve

Fig.54

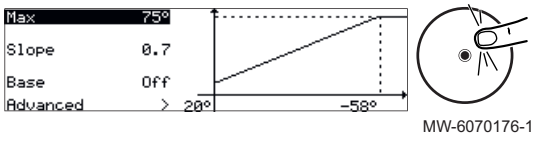

MW-6070176-1

Tab.37

Parameter	Description
Max	Maximum temperature of the circuit Can be set from 7 °C to 90 °C, default value: 75 °C
Slope	Value of the heating curve gradient Recommendations: • Underfloor heating: between 0.4 and 0.7 • Radiators: approximately 1.5
Base	Curve base point temperature Default value: 15 °C

2. The **Advanced** menu is used to access the advanced parameters.

8.4.2 Configuring the cooling function

Cooling of your heating zone is only possible if the parameter Zone Function is set to **Mixing Circuit** or **Fan Convector**.

1. To allow cooling of the heating zone, configure the parameter **Cooling mode** (AP028):

Access path for the function Cooling
☰ > Installer > Installation setup > Air Src Heat Pump > Cooling

Parameter	Description	Adjustment required
Cooling mode AP028	Configuration of the cooling mode	Active cooling on

2. Set the setpoint temperatures for cooling in the various zones.

Access path for setting the temperatures
☰ > Installer > Installation setup > Zone 1 or Zone 2 > General

Parameter	Description	Adjustment required
Floor Cool. setpoint CP270	Cooling flow temperature setpoint for the underfloor cooling	18(default value). Set the temperature according to the type of floor and the level of humidity.
Parameter for under-floor heating: **Fan Cool. setpoint** CP280	Cooling flow temperature setpoint for the fan convector	7 °C (default value) Set the temperature according to the convection fans used.
Parameter for a circuit with convection fan: **RevContactOTH cool** CP690 For zone 1 only	Reversed OpenTherm contact in cooling mode for heat demand per zone	• No • Yes Check the setting according to the thermostat or room sensor used.

8.5 Configuring the anti-legionella function

The anti-legionella function is used to bring the water in the domestic hot water tank to a temperature above the usual setpoint; this is done once a week, to remove any bacteria (legionella) which may be forming. This function is disabled upon delivery.

1. Follow the access path described below.

Access path
☰ > Installer > Installation setup > Domestic Hot Water > Anti-legionella

2. To activate the anti-legionella function, change the value of the **Legionella calor.** parameter (DP004).

Tab.38

Parameter	Description	Adjustment required
Legionella calor. DP004	Function to protect the domestic hot water tank against legion-ella. • Disabled • Weekly • Daily	• Weekly This function will only be ac-tive in 7 days (168 hours) • Do not use Daily

3. Adjust the setpoint temperature for the anti-legionella function. Default value: 65 °C.

Tab.39

Parameter	Description	Adjustment required
DHW AntiLeg Setpoint DP160	Setpoint temperature for the anti-legionella function.	Can be set from 60 °C to 90 °C

When the anti-legionella function is activated, the backups must be triggered so that the anti-legionella DHW setpoint can be reached. Therefore, one of the following three adjustments must be made:

Tab.40

Option	Adjustment required	Description
Reduce the start-up time delay for the DHW backup	Set the parameter DP090 (Delay StartBackupDHW) to 15 minutes (default value = 90 minutes).	The heat pump heats the domestic water to approximately 55 °C, then 15 minutes later the backups are started up to bring the DHW temperature to 65 °C. The benefit is optimal performance up to 55 °C.
Activate the DHW Comfort mode	Set the parameter DP051 (DHW management) to Comfort (HP+Boiler).	The backups are also used for the normal DHW load. DHW performance levels are not optimal.
Install the tank immersion heater option.	Install the tank immersion heater option and set the parameter DP334 (DHW backup type) to DHW Tank.	

8.6 Activating the screed drying function

The screed drying function is used to force a constant flow temperature or a series of successive temperature levels to accelerate drying of screed for the underfloor heating. You can use this function even if the outdoor unit is not yet connected. In this case, the immersion heater or the backup boiler will be switched on automatically.

Important
Depending on the climate conditions and losses from the building, the electrical backup alone may not be sufficient to dry the screed.

The screed drying function must be activated for each heating zone. When activated, each day at midnight, the system recalculates the setpoint temperature and decreases the number of days.

For the screed drying times and temperatures, follow the screed manufacturer's specifications.

Fig.55 Example

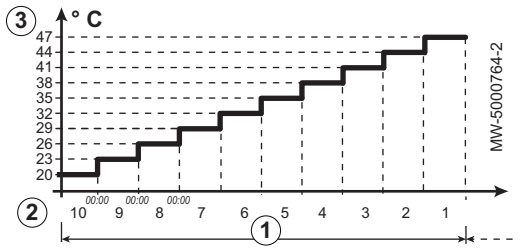

① Number of days of drying
② Drying start temperature
③ Drying end temperature

1. Follow the access path described below.

Access path
> Installer > Installation setup > Zone 1 > Screed drying

2. Configure the screed drying parameters for the relevant heating zone.

Parameter	Description	Adjustment required
Zone screed drying CP470	Setting of the screed drying program of the zone	① Number of days of drying
ScreedStartTemp CP480	Setting of the start temperature of the screed drying program of the zone	② Drying start temperature
ScreedStopTemp CP490	Setting of the stop temperature of the screed drying program of the zone	③ Drying end temperature

The screed drying programme will start immediately and continue for the selected number of days.

At the end of the programme, the selected operating mode will restart.

8.7 Configuring a room thermostat

8.7.1 Configuring an on/off or modulating thermostat

The OpenTherm (OT) modulating thermostat or on/off thermostat is connected to the **R-Bus** terminals on the **EHC–04** PCB.

The PCB is delivered with a bridge on the **R-Bus** terminal.

The **R-Bus** input can be configured to add the flexibility of using several types of on/off or OpenTherm modulating thermostat.

1. Follow the access path described below.

Access path
> Installer > Installation setup > Zone 1 > General

2. Configure the following parameters.

Tab.41 Configuration of the **R-Bus** input for using an on/off thermostat (dry contact)

Parameter	Description	Adjustment
OTH LogicLev contact CP640	Opentherm Logic level contact of the zone	Configuration of the on/off input contact direction for heating mode. • Closed (default value): heating demand when contact is closed • Open: heating demand when contact is open
RevContactOTH cool CP690	Reversed OpenTherm contact in cooling mode for heat demand per zone	Reversal of the direction of the logic in cooling mode compared to heating mode • No (default value): cooling demand uses the same logic as the heating demand • Yes: cooling demand uses the reverse logic to the heating demand

Tab.42 Setting the **OTH LogicLev contact (CP640)** and **RevContactOTH cool (CP690)** parameters

Value of the CP640 parameter	Value of the CP690 parameter	Position of the on/off contact for heating	Position of the on/off contact for cooling
Closed (default value)	No (default value)	Closed	Closed
Open	No	Open	Open
Closed	Yes	Closed	Open
Open	Yes	Open	Closed

8.7.2 Configuring a thermostat with a heating/cooling control contact

The AC thermostat (air conditioning) is always connected to the **R-Bus** and **BL1** terminals on the **EHC–04** PCB.

Priority will be given to the AC thermostat input over the other Summer/ Winter modes (Auto/Manual).

The PCBs are delivered with a bridge on the R-BUS terminals.

1. Connect the AC thermostat to the EHC–04 PCB.

Fig.56

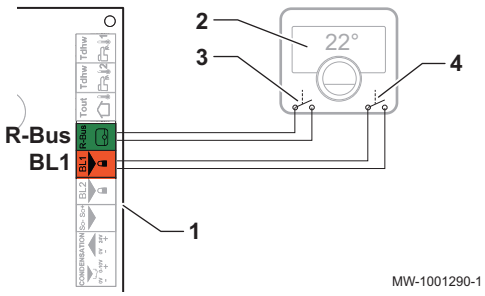

1 EHC–04 PCB
2 AC thermostat
3 ON/OFF output
4 "Heating/cooling contact" output

2. Configure the following parameters.

Access path
> Installer > Installation setup > Zone 1 > General

Parameter	Description	Adjustment
OTH LogicLev contact CP640	Opentherm Logic level contact of the zone Closed: heating demand when contact is closed. Open: heating demand when contact is open.	• Closed • Open
RevContactOTH cool CP690	Reversed OpenTherm contact in cooling mode for heat demand per zone No: follows the heating logic Yes: follows the reverse of the heating logic	• Yes • No

3. Configure the following parameters.

Access path
> Installer > Installation setup > Air Src Heat Pump > Blocking input

Parameter	Description	Adjustment
BL function AP001	BL input function selection	Heating Cooling
BL1 contact config. AP098	BL1 input contact configuration Closed: cooling active when BL contact is closed. Open: cooling active when BL contact is open.	• Closed • Open

Tab.43 Configuration A - by default

Value of the OTH LogicLev contact (CP640) parameter	Value of the BL1 contact config. (AP098) parameter	The BL1 multifunction input is	Operating mode for the heat pump	If the OT contact is open	If the OT contact is closed
Closed (default value)	Closed (default value)	Open	Cooling	No cooling demand	Cooling demand
Closed (default value)	Closed (default value)	Closed	Heating	No heating demand	Heating demand

Tab.44 Configuration B

Value of the OTH LogicLev contact (CP640) parameter	Value of the BL1 contact config. (AP098) parameter	The BL1 multifunction input is	Operating mode for the heat pump	If the OT contact is open	If the OT contact is closed
Closed	Open	Open	Heating	No heating demand	Heating demand
Closed	Open	Closed	Cooling	No cooling demand	Cooling demand

Tab.45 Configuration C

Value of the OTH LogicLev contact (CP640) parameter	Value of the BL1 contact config. (AP098) parameter	The BL1 multifunction input is	Operating mode for the heat pump	If the OT contact is open	If the OT contact is closed
Open	Closed	Open	Cooling	Cooling demand	No cooling demand
Open	Closed	Closed	Heating	Heating demand	No heating demand

Tab.46 Configuration D

Value of the OTH LogicLev contact (CP640) parameter	Value of the BL1 contact config. (AP098) parameter	The BL1 multifunction input is	Operating mode for the heat pump	If the OT contact is open	If the OT contact is closed
Open	Open	Open	Heating	Heating demand	No heating demand
Open	Open	Closed	Cooling	Cooling demand	No cooling demand

8.8 Improving domestic hot water or heating comfort

The system does not allow the simultaneous production of heating and domestic hot water. It is possible to alter the parameters to adapt the operation of the product to your needs.

1. The timer programming for domestic hot water production can be altered based on your night-time habits, for example.
2. If modification of the timer programming is not sufficient, go into the domestic hot water setting parameters.

Access path
> Installer > Installation setup > Domestic Hot Water > General

3. Adjust the following domestic hot water production setting parameters:

Tab.47 Improving hot water comfort

Parameter	Description	Adjustment required
Max. DHW duration DP047	Maximum duration of the domestic hot water production.	Increase the maximum authorised duration for domestic hot water production. Longer period of hot water production.
Min. CH before DHW DP048	Minimum heating duration between two periods of domestic hot water production.	Reduce the minimum heating duration between two domestic hot water production runs. The time between two periods of hot water production is decreased.
Hysteresis DHW DP120	Hysteresis temperature relative to the DHW temperature setpoint	Reduce the setpoint temperature differential triggering the domestic hot water tank load. More frequent period of hot water production.

Tab.48 Improving heating comfort

Parameter	Description	Adjustment required
Max. DHW duration DP047	Maximum duration of the domestic hot water production.	Reduce the maximum authorised duration for domestic hot water production. Shorter period of hot water production.
Min. CH before DHW DP048	Minimum heating duration between two periods of domestic hot water production.	Increase the minimum heating duration between two domestic hot water production runs. The time between two periods of hot water production is increased.
Hysteresis DHW DP120	Hysteresis temperature relative to the DHW temperature setpoint	Increase the setpoint temperature differential triggering the domestic hot water tank to be charged. Less frequent period of hot water production.

4. Check the improvement in comfort over one week.
5. If the comfort is not improved to your satisfaction, simply readjust the parameters.

8.9 Configuring sources of energy

8.9.1 Configuring the estimated electrical energy consumption function

Tab.49

Connections	The electrical energy meter is connected to the **S0+/S0-** input on the **EHC–04** PCB. Do not install meters for the electrical backups.
Energy meter specifications	• Minimum admissible voltage: 27 V • Minimum admissible intensity: 20 mA • Minimum pulse time: 25 ms • Maximum frequency: 20 Hz • Pulse weight: between 1 and 1000 Wh If the meter pulse weight is given in number of pulses/kWh, the pulse weight must be between the following numbers: 1, 2, 4, 5, 8, 10, 20, 25, 40, 50, 100, 125, 200, 250, 500 or 1000 Wh.

Energy metering provides information on:

- electrical energy consumption,

- the production of thermal energy for heating, cooling and domestic hot water production modes.

1. Configure the following parameters.

Access path
> Installer > Installation setup > Air Src Heat Pump > Energy management

Parameter	Description	Adjustment
Elec. Pulse value HP033	Value of the pulse coming from the electrical counter The setting range goes from 0 (no metering) to 1000 Wh and the factory setting for the pulse weight is 1 Wh.	See table below.
Min. Outdoor T. HP HP051	Minimum outdoor temperature below which the compressor of the Heat Pump is stopped The setting range goes from -20 °C to 5 °C.	-15 °C for outdoor units from 4.5 to 6 kW -20 °C for outdoor units from 8 to 16 kW

2. Check the pulse weight (kWh).

Tab.50 Any numbers other than those stated in the table will not work.

Pulse weight in kWh	Values to be configured for HP033 parameter
1	1000
2	500
4	250
5	200
8	125
10	100
20	50
25	40
40	25
50	20
100	10
125	8
200	5
250	4
500	2
1000	1

8.9.2 Supplying the heat pump with photovoltaic energy

When lower cost electrical energy, such as photovoltaic energy, is available, the heating circuit and domestic hot water tank can be overheated. Underfloor cooling cannot be supplied with power in this way.

1. Activate overheating authorisation for the heating circuit or the domestic hot water tank by adjusting the BL function (AP001) parameter or the BL2 function (AP100) parameter.
2. Connect a dry contact to the **BL1** input.
   ⇨ The **BL1** input is activated. The heating circuit and the domestic hot water tank will be overheated using the heat pump.
3. Connect a dry contact to the **BL2** input.
   ⇨ The **BL2** input is activated. The heating circuit and the domestic hot water tank will be overheated using the heat pump and backups.
4. Follow the access path below.

Access path
> Installer > Installation setup > Air Src Heat Pump > Blocking input

5. Configure the heat pump parameters

Tab.51

Parameter	Description	Adjustment required
BL function AP001	BL input function selection	Photovoltaic HP Only
BL2 function AP100	BL2 input function selection	PV HP And backup

6. In order to voluntarily overheat the installation and benefit from low-tariff electricity, set the authorisations to exceed the setpoint temperatures.

Tab.52

Parameter	Description	Adjustment required
Offset heating - PV HP091	Heating setpoint temperature offset when photovoltaic energy is available	Set the authorisation to exceed the heating setpoint temperature from 0 to 30 °C
Offset DHW - PV HP092	Domestic hot water setpoint temperature offset when photovoltaic energy is available	Set the authorisation to exceed the domestic hot water setpoint temperature from 0 to 30 °C

8.9.3 Connecting the installation to a Smart Grid

The heat pump can receive and manage control signals from the "smart" energy distribution network (**Smart Grid Ready**). Based on the signals received by the terminals of the **BL1 IN** and **BL2 IN** multifunction inputs, the heat pump shuts down or voluntarily overheats the heating system in order to optimise electricity consumption.

Tab.53 Operation of the heat pump in a **Smart Grid**

BL1 IN input	BL2 IN input	Operating
Inactive	Inactive	Normal: the heat pump and the electrical backup operate normally
Active	Inactive	Off: the heat pump and the electrical backup are shut down
Inactive	Active	Economy: the heat pump voluntarily overheats the system without the electrical backup
Active	Active	Super Economy: the heat pump voluntarily overheats the system with the electrical backup

Overheating is activated depending on whether the dry contact on inputs BL1 and BL2 is open or closed, and on the settings of the **BL1 contact config.** (AP098) and **BL2 contact config.** (AP099) parameters which control the activation of functions with respect to the open or closed position of the contacts.

1. Switch off the power supply to the indoor unit.
2. Connect the **Smart Grid** signal inputs to the **BL1 IN** and **BL2 IN** inputs on the EHC–04 PCB. The signals come from dry contacts.
3. Turn on the electricity supply and switch on the heat pump.
4. Configure the **BL function** AP001 and AP100 parameters.

Access path enabling connection to a Smart Grid
> Installer > Installation setup > Air Src Heat Pump > Blocking input

Parameter	Description	Adjustment required
AP001	**BL function**	Smart Grid ready
AP100	**BL2 function**	Smart Grid ready

⇨ The heat pump is ready to receive and manage **Smart Grid** signals.

5. Choose the contact directions of the **BL1 IN** and **BL2 IN** multifunction inputs by setting the following parameters.

Parameter	Description	Adjustment required
BL1 contact config. AP098	BL1 input contact configuration	• 0 = input active on Open contact • 1 = input active on Closed contact
BL2 contact config. AP099	BL2 input contact configuration	• 0 = input active on Open contact • 1 = input active on Closed contact

6. Configure the temperature offsets for the voluntary overheating by configuring the following parameters.

Parameter	Description	Adjustment required
Offset heating - PV HP091	Heating setpoint temperature offset when photovoltaic energy is available	0
Offset DHW - PV HP092	Domestic hot water setpoint temperature offset when photovoltaic energy is available	0

8.10 Resetting or re-establishing the parameters

8.10.1 Auto-detecting options and accessories

Use this function after replacing a power circuit board on the heat pump in order to detect all the devices connected to the **L-Bus** communication bus.

1. Follow the access path described below.

Access path
☰ > Installer > Advanced menu > Auto detect

2. Select **Confirm** to carry out the auto-detect.
   ⇨ The system will restart automatically.

8.10.2 Reset the configuration numbers CN1 and CN2

If you have replaced the PCB or made an error during setting, you must reset the configuration numbers CN1 and CN2. Thanks to these numbers, the system recognises the type of outdoor unit and the type of backup present on the installation.

Important
All the other parameters are also reset (factory parameters).

1. Follow the access path described below.

Access path
☰ > Installer > Advanced menu > Set configuration code > EHC–04

2. Set the **CN1** and **CN2** parameters. The values are available on the data plate of the heat pump indoor unit.
3. Select **Confirm** to save the settings.

8.10.3 Reverting to the factory settings

1. Follow the access path described below.

Access path
☰ > Installer >Advanced menu > Reset to factory settings

2. Select **Confirm** to revert to the factory settings.
   ⇨ The system will restart automatically.

8.11 Activate/Deactivate the appliance's Bluetooth®

The appliance can communicate with a smartphone via the **Bluetooth®** function. The user can then enter all settings using the smartphone app.

Fig.57

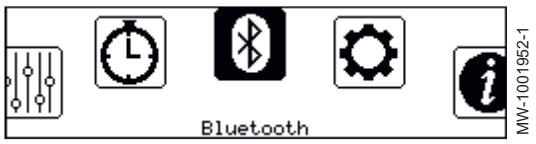

1. Press the ☰ button.
2. Select **Bluetooth** to access the **Bluetooth®** connection parameters.
3. Enter the required setting.

Tab.54

Parameter	Description	Adjustment required
Bluetooth AP129	Bluetooth enabled	• On: Bluetooth® is activated (factory setting) • Off: Bluetooth® is deactivated.

To establish a **Bluetooth®** connection between the smartphone and the appliance, use the information shown on the **Bluetooth®** label.

8.12 Counters menu

You can display several values concerning the current state of the heating system, such as the number of operating hours.

Follow the access path described below.

Access path
☰ > Installer > Counters

Parameter	Description
Pump running hours AC026	Counter that shows the number of pump running hours
Pump starts AC027	Counter that shows the number of pump starts
Number of hours during which the diverting valve is in DHW position DC003	Number of hours during which the diverting valve is in DHW position
DHW valve cycles DC002	Numbers of Domestic Hot Water diverting valve cycles
CH Energy Consumed AC005	Energy consumed for central heating
DHW energy consumed AC006	Energy consumed for domestic hot water
CH Energy delivered AC008	Thermal energy delivered for central heating
DHW Energy delivered AC009	Thermal energy delivered for domestic hot water
Heat gen run hrs PC003	Number of compressor operating hours
DHW run hours DC005	Number of compressor start-ups
DHW starts DC004	Number of compressor start-ups during domestic hot water production
Backup 1 hours AC028	Number of operating hours of the first electrical backup stage
Backup 1 starts AC030	Number of starts of the first electrical backup stage
Service run hours AC002	Number of hours that the appliance has been producing energy since last service
Hours since service AC003	Number of hours since the previous servicing of the appliance

Parameter	Description
Starts since service AC004	Number of heat generator starts since the previous servicing.
Hours on mains AC001	Number of hours that the appliance has been on mains power
Cool Energy consumed AC007	Energy consumed for cooling
Cool Energy deliver. AC010	Thermal energy delivered for cooling
Heating producer hrs PC000	Number of producer operating hours in central heating

8.13 Reading out measured values

You can display several measured values concerning the current state of the heating system such as temperatures, status of the appliance, etc.

Follow the access path described below.

Access path
> Installer > Signals

Sub-menu	Parameter	Description
Zone 1	**Zone Troom setpoint** CM190	Wished room temperature setpoint of the zone
	Zone Tflow Setpoint CM070	Current Flow temperature setpoint of zone
	ZoneCurrentMode CM120	Zone Current Mode
	ZoneCurrent activity CM130	Current activity of the zone
	ZoneCurrentHeatMode CM200	Displaying current operating mode of the zone
	ZoneTout temp CM210	Current outdoor temperature of the zone
Outdoor temperature	**Outside temperature** AM027	Instantaneous outside temperature
	SeasonMode AM091	Seasonal mode active (summer / winter)
	Low average Out Temp	Low average of outside sensor temperature
	High average OutTemp	High average of outside sensor temperature
	Out sensor detected AP078	Outside sensor detected in the application

Sub-menu	Parameter	Description
Air Src Heat Pump	**Status Appliance** AM012	Current main status of the appliance.
	Sub status Appliance AM014	Current sub status of the appliance.
	Internal setpoint AM101	Internal system flow temperature setpoint
	System Flow Temp AM016	Flow temperature of appliance.
	HP flow T. average HM020	Heat pump flow temperature average
	HP flow T. setpoint HM003	Heat pump flow temperature setpoint
	HP flow T. HM001	Heat pump flow temperature
	Heat pump return temperature HM002	Heat pump return temperature
	T return AM018	Return temperature of appliance. The temperature of the water entering the appliance.
	Start compressor HM030	Request to start compressor
	Compressor HM008	Compressor operation
	Heat pump defrost HM009	Heat pump defrost function in progress
	Heat pump error HM007	Heat pump in error
	Pump running? AM015	Pump running?
	Water pressure AM019	Heating circuit water pressure
	Backup1 HM012	First stage of backup operation
	BL1 contact position HM004	BL1 contact position
	BL2 contact position HM005	BL2 contact position

8.14 List of parameters

The appliance parameters are described directly in the user interface. The following chapters include additional information on some of these parameters as well as their default values (factory settings).

8.14.1 Zone 1 or Zone 2

CP : Circuits Parameters = Heating circuit parameters

Tab.55

Access path
> Installer > Installation setup > Zone 1 or Zone 2

Tab.56 **> Heat curve**

Parameters	Description of the parameters	Factory setting Zone 1	Factory setting Zone 2
MaxZoneTFlowSetpoint CP000	Maximum Flow Temperature setpoint zone For circuit A: Can be set from 7 °C to 90 °C	90 °C	50 °C

Tab.57 **> General**

Parameters	Description of the parameters	Factory setting Zone 1	Factory setting Zone 2
MaxReducedRoomT.Lim CP070	Max Room Temperature limit of the circuit in reduced mode, that allows switching to comfort mode Can be set from 5 °C to 30 °C	16 °C	16 °C
TypeReducedNightMode CP340	Type of reduced night mode, stop or maintain heating of circuit • Stop heat demand • Continue heat demand	Continue heat demand	Stop heat demand

8.14.2 Domestic Hot Water (Domestic Hot Water)

A domestic hot water sensor must be connected to the EHC–04 PCB to display these parameters.

DP : Direct Hot Water Parameters = Domestic hot water tank parameters

Tab.58

Access path
> Installer > Installation setup > Domestic Hot Water

Tab.59 **> General**

Parameters	Description of the parameters	Factory setting
Hysteresis DHW DP120	Hysteresis temperature relative to the DHW temperature setpoint Can be set from 0 °C to 40 °C	8°C
DhwMaxTemp DP046	Maximum domestic hot water temperature Can be set from 10 °C to 70 °C	70 °C
Postrun DHW pump/3wv DP213	Post run time of the DHW pump/3 way valve after DHW production Can be set from 0 Min to 99 Min	3 min
DHW holiday setpoint DP337	Holiday temperature setpoint from the Domestic Hot Water tank Can be set from 10 °C to 60 °C.	10 °C

Tab.60 **> Backup**

Paramètres	Description of the parameters	Factory setting
Delay StartBackupDHW DP090	Delay time for starting the backup energy source for DHW Can be set from 0 Min to 120 Min	90 Min
DHW management DP051	ECO mode: use of the heat pump only. Comfort mode: use of the heat pump and backup energy sources • 0: ECO (Only HP) • 1: Comfort (HP+Boiler)	ECO (Only HP)

8.14.3 Outdoor temperature

AP : Appliance Parameters = Appliance parameters

Tab.61

Access path
> Installer > Installation setup > Outdoor temperature

Tab.62

Parameters	Description of the parameters	Factory setting Zone 1	Factory setting Zone 2
Frost min out temp AP080	Outside temperature below which the antifreeze protection is activated: • can be set from -29 to 20 °C • set to -30 °C = function deactivated	3 °C	3°C
Building Inertia AP079	Inertia of the building used for heat up speed Can be set from 0 to 10 • 0 = 10 hours for a building with low thermal inertia, • 3 = 22 hours for a building with normal thermal inertia, • 10 = 50 hours for a building with high thermal inertia. **Modification of the factory setting is only useful in exceptional cases.**	3	3

8.14.4 Air Src Heat Pump

AP : Appliance Parameters = Appliance parameters

HP : Heat-pump Parameters = Heat pump parameters

Tab.63

Access path
> Installer > Installation setup > Air Src Heat Pump

Tab.64

Sub-menu	Parameter	Description	Factory setting EHC–04
General	**Max CH flow setpoint** AP063	Maximum central heating flow temperature setpoint Can be set from 20 °C to 90 °C	Electric backup: 75 °C
	CH function on AP016	Enable central heating heat demand processing • Off • On	On
	DHW function on AP017	Enable domestic hot water heat demand processing • Off • On	On
	Boiler Pump function AP102	Configuration of the boiler pump as zone pump or system pump (feed lowloss header) • No • Yes	Yes
	CH Pump postrun time PP015	Central heating pump post run time • Can be set from 0 Min to 98 Min • set to 99 Min	3 Min
	Buffer tank HP086	Enable the hydraulic management of the buffer tank • No • Yes	No
	Buffer tank Hyst. HP087	Temperature hysteresis to start or stop heating the buffer tank Can be set from 0 to 30 °C	6 °C
Water flow and pressure	**Flow rate warning** HP011	Flow rate that triggers a warning message indicating that flow rate becomes insufficient Can be set from 5 l/min to 95 l/min	8 l/min for 6 kW 9 l/min for 8 kW 14 l/min for 11 kW
	Max. CH pump speed PP016	Maximum central heating pump speed (%) Can be set from 20 % to 100 %	100%
	Min CH pump speed PP018	Minimum central heating pump speed (%) Can be set from 20 % to 100 %	30%
	MessMinWaterPressure AP058	Warning message indicating that pressure is low Can be set from 0 bar to 2 bar	0.8 bar
	Deaeration program AP101	Deaeration program settings • No deair at power up • Always deair at pwr	Always deair at pwr

Sub-menu	Parameter	Description	Factory setting EHC–04
Backup	**Bivalent temperature** HP000	Above the bivalent temperature, the backup energy source is not allowed to operate	5 °C
	Backup type HP029	Type of backup used in the heat pump	1 Electrical Stage
	Delay StartBackup CH HP030	Delay time for starting the backup energy source for the heating circuits Can be set from 0 Min to 600 Min	0 Min
	Delay stop backup CH HP031	Delay time for stopping the backup energy source for the heating circuits Can be set from 0 Min to 600 Min	4 min
	Delay Min.Outdoor T. HP047	Delay for starting the backup when the outdoor temp. is equal to the parameter Min.Outdoor T.backup	8 °C
	Delay Max.Outdoor T HP048	Delay for starting the backup when the outdoor temp. is equal to the parameter Max.Outdoor T. backup	30 °C
	Minimum outdoor temperature for backup HP049	Minimum outdoor temperature related to the parameter Delay Min.Outdoor T.	-10 °C
	Maximum outdoor temperature for backup HP050	Maximum outdoor temperature related to the parameter Delay Max.Outdoor T.	15 °C
Cooling	**Grant permission for cooling** AP029	Grant permission for the heat pump to be able to deliver cooling	Allowed
	Configuration of the cooling mode AP028	Configuration of the cooling mode	Off
	Forced cooling mode AP015	The cooling mode is forced whatever the outdoor temperature	No
	Humidity sensor AP072	Humidity sensor configuration	No
	Humidity threshold HP080	Relative humidity level over which the offset is added to the cooling setpoint	50
Energy management	**Elec. Pulse value** HP033	Value of the pulse coming from the electrical counter	1
	Min. Outdoor T. HP HP051	Minimum outdoor temperature below which the compressor of the Heat Pump is stopped	• -15 °C for 6 kW • -20 °C for 8 kW • -20 °C for 11 kW
Blocking input BL input	**BL function** AP001	BL input function selection • Full blocking • Partial blocking • User reset locking	Partial blocking
	BL1 contact config. AP098	BL1 input contact configuration	Open
	BL2 function AP100	BL2 input function selection • Full blocking • Partial blocking • User reset locking	Partial blocking
	Offset heating - PV HP091	Heating setpoint temperature offset when photovoltaic energy is available	0
	Offset DHW - PV HP092	Domestic hot water setpoint temperature offset when photovoltaic energy is available	0

Sub-menu	Parameter	Description	Factory setting EHC–04
Manual heat demand	**Manual Heat Demand** AP002	Enable manual heat demand function • Off • With setpoint: in this mode, the temperature setpoint used will be that for the (Manual Heat Demand AP026) parameter • TOutdoor Control	Off
	Setpoint manual HD AP026	Flow temperature setpoint for manual heat demand Can be set from 7 °C to 90 °C	40 °C
Silent mode	**Silent mode** HP058	Enabling heat pump silent mode	No
	Low noise start time HP094	Start time of the heat pump low noise function	22:00
	Low noise end time HP095	End time of the heat pump low noise function	06:00
Service settings	**Service notification** AP010	Select the type of service notification • None • Custom notification	None
	Service hours AP009	Number of heat generator operating hours for raising a service notification Can be set from 0 Hours to 65534 Hours	17400 hours
	Service hours mains AP011	Hours powered to raise a service notification Can be set from 0 Hours to 65534 Hours	17400 hours

8.14.5 ☰ > Bluetooth®

In the Bluetooth sub-menu, you can find all parameters linked to the Bluetooth® connection.

Tab.65

Parameters	Description of the parameters	Factory setting
Bluetooth AP129	Activate the Bluetooth function to enable communication with the appliance: • On: **Bluetooth®** activated • Off: **Bluetooth®** deactivated	On
Current pairing code	**Bluetooth®** pairing code (specific to each appliance)	-

8.15 Description of the parameters

8.15.1 Running the back-up in heating mode

■ Start-up conditions for the backup

Backups are authorised to start up normally except in cases of power cut-off or limitation linked to bivalency.

If the heat pump should also be limited, the backups are nevertheless authorised to operate to guarantee heating comfort.

In heating mode, the backup is managed by the following parameters.

Access path
☰ > **Installer > Installation setup > Air Src Heat Pump > Backup**

Parameter	Description	Adjustment
Bivalent temperature HP000	Bivalent outdoor temperature: above this temperature, the backup is cut off and only the heat pump is authorised to function. Can be set from -10 °C to 20 °C	5 °C
Delay StartBackup CH HP030	Delay time for starting the backup energy source for the heating circuits Can be set from 0 to 600 minutes. If this parameter is set to 0, the backup activation time delay is set based on the outdoor temperature.	0 minutes

If the **Delay StartBackup CH** parameter is set to 0, the time delay for activating the backup is set depending on the outdoor temperature: the lower the outdoor temperature, the quicker the backup will be activated.

Fig.58

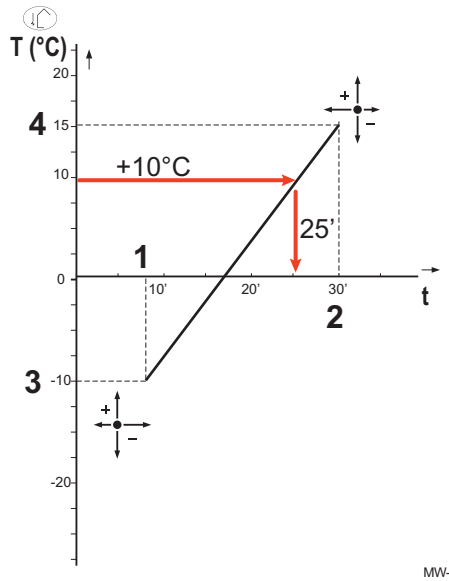

t Time (minutes)
T Outdoor temperature (°C)

1 Backup start delay for Min. Outdoor T. HP047
2 Backup start delay for Max.Outdoor T. HP048
3 Minimum outdoor temperature for backup HP049
4 Maximum outdoor temperature for backup HP050

Important
In this example, with the factory-set parameters, if the outdoor temperature is 10°C, the backup will start up 25 minutes after the outdoor unit of the heat pump.

Tab.66 Time delay curve parameters for tripping the backup when Delay StartBackup CH (HP030) is set to 0

Parameter	Description	Factory setting
Delay Min.Outdoor T. HP047	Delay for starting the backup when the outdoor temp. is equal to the parameter Min.Outdoor T.backup Can be set from 0 to 60 minutes	8 minutes
Delay Max.Outdoor T HP048	Delay for starting the backup when the outdoor temp. is equal to the parameter Max.Outdoor T. backup. Can be set from 0 to 60 minutes	30 minutes
Min.Outdoor T.backup HP049	Minimum outdoor temperature related to the parameter Delay Min.Outdoor T.. Can be set from -30 to 0 °C	-10 °C
Max.Outdoor T.backup HP050	Maximum outdoor temperature related to the parameter Delay Max.Outdoor T.. Can be set from -30 to +20 °C	15 °C

Backup operation if an error occurs on the outdoor unit

In case of an error on the outdoor unit, the electric heating element starts after 3 minutes to guarantee heating comfort.

Backup operation when defrosting the outdoor unit

When the outdoor unit is defrosting, the control system ensures the protection of the system by starting up the backup if necessary.

If the backup is not sufficient to ensure the protection of the outdoor unit during defrosting, then the outdoor unit is switched off.

■ Operating principle when the outside temperature falls below the operating threshold of the outdoor unit

If the outside temperature is below the minimum operating temperature of the outdoor unit as defined by the parameter **HP051**, the outdoor unit is not permitted to operate.

8.15.2 Running the back-up in domestic hot water mode

■ Start-up conditions for the backup

The start-up conditions for the backup producing domestic hot water are described in the following table.

Tab.67

Parameter	Setting
AP001	The function of the **BL1** blocking input is not set to Backup relieved, Gen.&Backup relieved or Photovoltaic HP Only
AP100	The function of the **BL2** blocking input is not set to Backup relieved, Gen.&Backup relieved or Photovoltaic HP Only

■ Operating description

Tab.68 Behaviour of the electrical backup

Value of the parameter DP051	Operating description
Economy	The system gives priority to the heat pump during domestic hot water production. Recourse to the electrical backup is only taken if the **DP090** time delay has elapsed in domestic hot water mode, unless hybrid mode is activated. In that case, hybrid logic takes over.
Comfort	Domestic hot water production mode gives priority to comfort by accelerating domestic hot water production by simultaneously using the heat pump and the electrical backup. In this mode, there is no maximum time for domestic hot water production as the use of the backups helps to ensure domestic hot water comfort more quickly.

8.15.3 Operation of the switch between heating and production of domestic hot water

The system does not allow the simultaneous production of heating and domestic hot water.

The switch logic between domestic hot water mode and heating mode operates as follows:

Fig.59

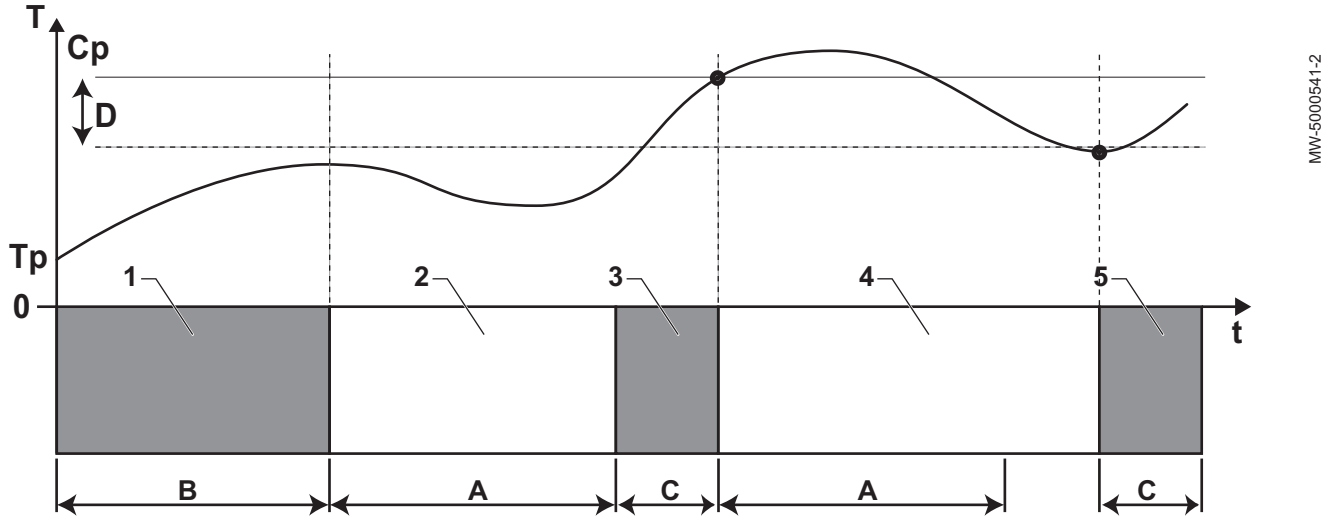

A **DP048:** Minimum heating duration between two domestic hot water production runs
B **DP047:** Maximum authorised duration for domestic hot water production
C Duration for domestic hot water production (less than **DP047**) to reach the DHW set point
Cp **DP070:** Domestic hot water "Comfort" set point temperature

or

DP080: Domestic hot water "Reduced" set point temperature
T Temperature
Tp **DM001:** Domestic hot water temperature (lower temperature sensor)

DM006: Domestic hot water temperature (upper temperature sensor)
t Time
D **DP120:** Set point temperature differential triggering the domestic hot water tank to be charged

Tab.69

Phase	Operating description
1	Domestic hot water production only. When the system is switched on, if domestic hot water production is enabled and acceleration of domestic hot water production is not required (**DP051** set to economy), a domestic hot water production cycle starts for a maximum duration that can be adjusted and set by the **DP047** parameter. In the event of insufficient heating comfort, the heat pump is running too long in domestic hot water mode: reduce the maximum duration of domestic hot water production.
2	Heating only. Production of domestic hot water is off. Even if the domestic hot water set point is not reached, a minimum heating period is forced. This period can be adjusted and defined with the **DP048** parameter. After the heating period, tank loading is again enabled.
3	Domestic hot water production only. When the domestic hot water set point is reached, a period in heating mode begins.
4	Heating only. When the **DP120** differential is reached, domestic hot water production is triggered. If there is not enough domestic hot water (e.g. if the domestic hot water does not heat up quickly enough): reduce the trip differential (hysteresis) by modifying the value of the **DP120** parameter. The DHW tank will then heat up the water more quickly.
5	Domestic hot water production only.

8.15.4 Operation of the heating curve

The relationship between the outdoor temperature and the circuit flow heating water temperature is controlled by a heating curve or water temperature setpoint. This can be adjusted according to the requirements of the installation.

Important
Regulation via the heating curve is only possible when the **regulation strategy** CP780 is set on the modes "Acc. to Ext. T." and "Acc. to Ext. T and Room T.".

Fig.60

MW-6070170-1

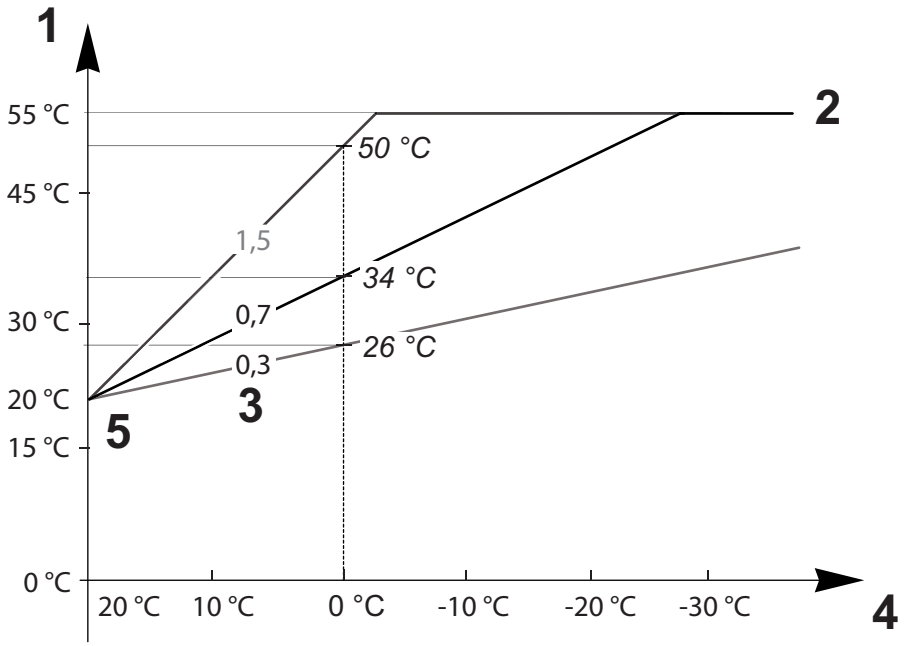

1 **Current Flow temperature setpoint of zone** CM070
2 **Maximum Flow Temperature setpoint zone** CP000 = 55 °C
3 **Heating curve temperature gradient of the zone** CP230
4 **Outdoor temperature** CM210
5 **Curve base temperature** CP210 / CP220 = 20 °C

Tab.70

Parameters	Description of the parameters
Maximum Flow Temperature setpoint zone CP000	The **flow setpoint temperature for the circuit** CM070 is limited by the **maximum flow temperature setpoint for the circuit** CP000. When using a room thermostat, the setpoint retained is the lowest temperature between the **flow setpoint temperature for the circuit** CM070 and the **maximum flow temperature setpoint for the circuit** CP000.
Heating curve temperature gradient of the zone CP230	The steeper the **gradient of the heating temperature curve for the circuit** CP230, the quicker the **flow setpoint temperature for the circuit** CM070 will increase. Decrease the **gradient of the heating temperature curve for the circuit** CP230 in case of over-heating in mid-winter. Example: for an **outdoor temperature** CM210 of 0 °C: if CP230 = 0.7 then CM070 = 34 °C if CP230 = 1.5 then CM070 = 50 °C
Curve base temperature CP210 / CP220	Increase the **curve base temperature** CP210 / CP220 when the heating is insufficient for mild outdoor temperatures. CP210 corresponds to the curve base temperature in comfort mode. CP220 corresponds to the curve base temperature in reduced mode.
Wished room temperature setpoint of the zone CM190	If the **curve base temperature** CP210 / CP220 is set to 15 °C, then it becomes equal to the **Required room setpoint temperature for the circuit** CM190. Example: if CP210 = 15 °C then CM190 = the room setpoint temperature for the activity/timer programme.
Outdoor temperature CM210	The **outdoor temperature** CM210 is affected by the position of the outdoor temperature sensor: check the sensor is positioned correctly.
Current Flow temperature setpoint of zone CM070	The **flow setpoint temperature for the circuit** CM070 is calculated according to the heating curve parameters: • Without setting of the **curve base temperature** (CP210 / CP220 set to 15 °C): CM070 = (CM190 - CM210) x CP230 + CM190 • With setting of the **curve base temperature** (CP210 / CP220 > 15 °C): CM070 = (CM190 - CM210) x CP230 + (CP210 or CP220)

Fig.61 Heating curve without curve base

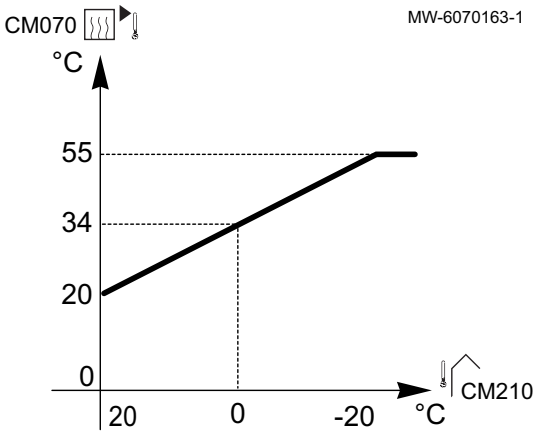

Without setting of the **curve base temperature** (CP210 / CP220 set to 15 °C): an **outdoor temperature** CM210 of 0 °C will give a **flow setpoint temperature for the circuit** CM070 of 34 °C.

Fig.62 Heating curve with curve base

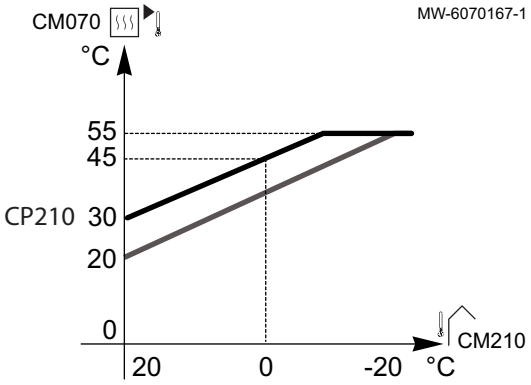

With setting of the **curve base temperature** (CP210 / CP220 > 15 °C) to 30 °C: an **outdoor temperature** CM210 of 0 °C will give a **flow setpoint temperature for the circuit** CM070 of 45 °C.

9 Connecting diagrams and configuration

9.1 Installation with one immersion heater and one direct circuit

9.1.1 Hydraulic diagram

Fig.63

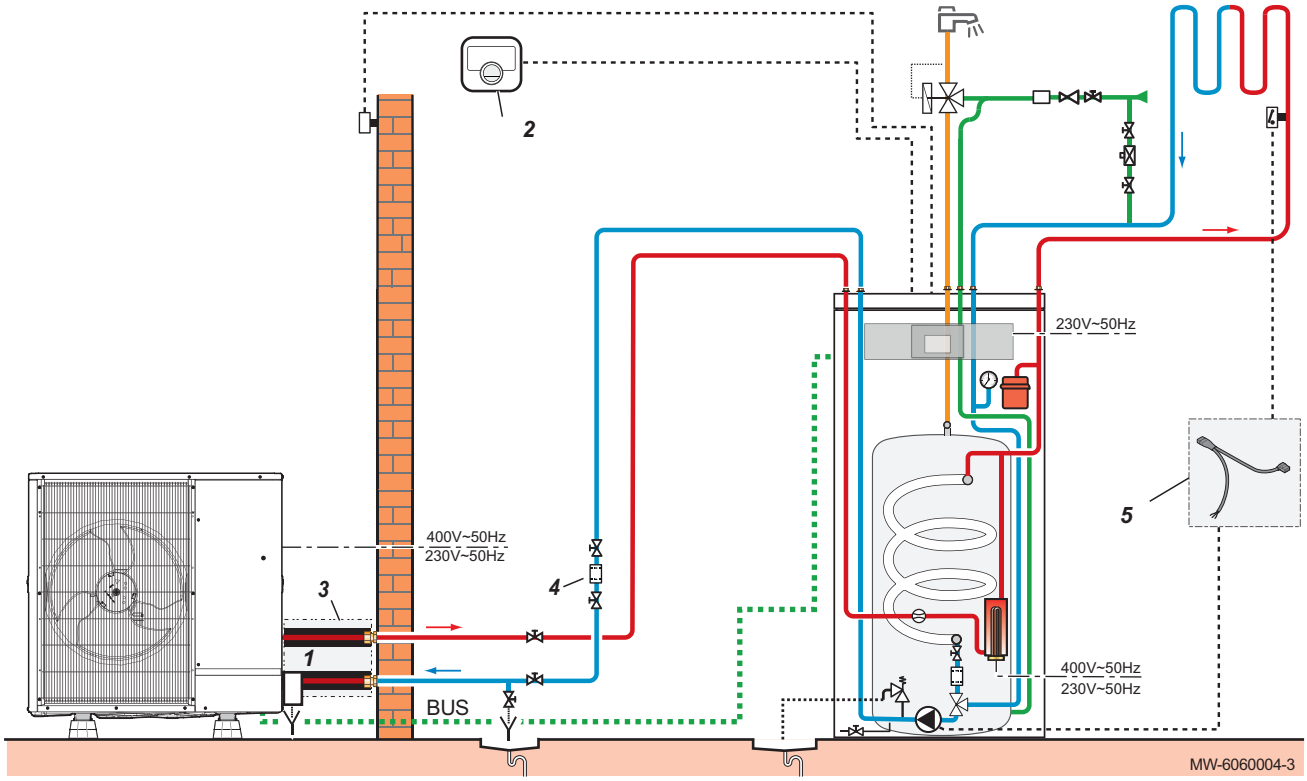

1 Antifreeze valve
2 eTwist connected thermostat
3 Insulated hose kit
4 Magnetic sieve filter
5 Wiring kit for direct underfloor heating

9.1.2 Carrying out the electrical connections and the parameter settings

Fig.64

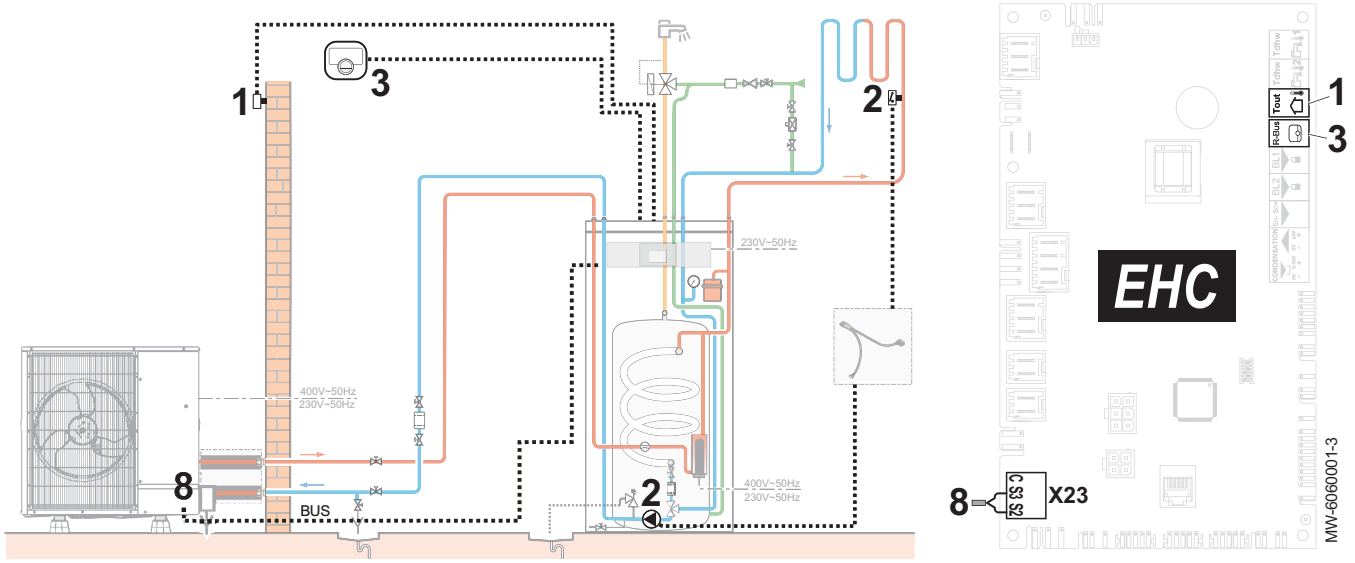

1 Outdoor temperature sensor
2 Wiring kit for direct underfloor heating
3 Thermostat
8 Outdoor unit bus connection

1. Connect the accessories and options to the EHC–04 PCB, respecting the 230-400V and 0-40V cable feed-throughs.
2. Set the main heating parameters.

Path for accessing underfloor heating circuit parameters (Zone1).
> Installer > Installation setup > Zone1

Parameter		Description	Adjustment required
Zone Function CP020		Functionality of the zone	Factory setting: Circuit direct Set the parameter depending on your installation: • Mixing Circuit • Fan Convector Only these 2 settings are used for cooling.
Heat curve	**Zone Heating Curve** CP230	Value of the heating curve gradient	Set it between 0.4 and 0.7 (for an underfloor heating circuit). Adapt the values of the heating curve in order to obtain optimum comfort.
	MaxZoneTFlowSetpoint CP000	Maximum Flow Temperature setpoint zone	Factory setting: 75 °C Adjust the temperature as required.

3. Set the authorisation for cooling.

Access path
> Installer > Installation setup > Air Src Heat Pump > Cooling

Parameter	Description	Adjustment required
Cooling mode AP028	Configuration of the cooling mode	Active cooling on

9.2 Installation with one immersion heater and two circuits

9.2.1 Hydraulic diagram

Fig.65

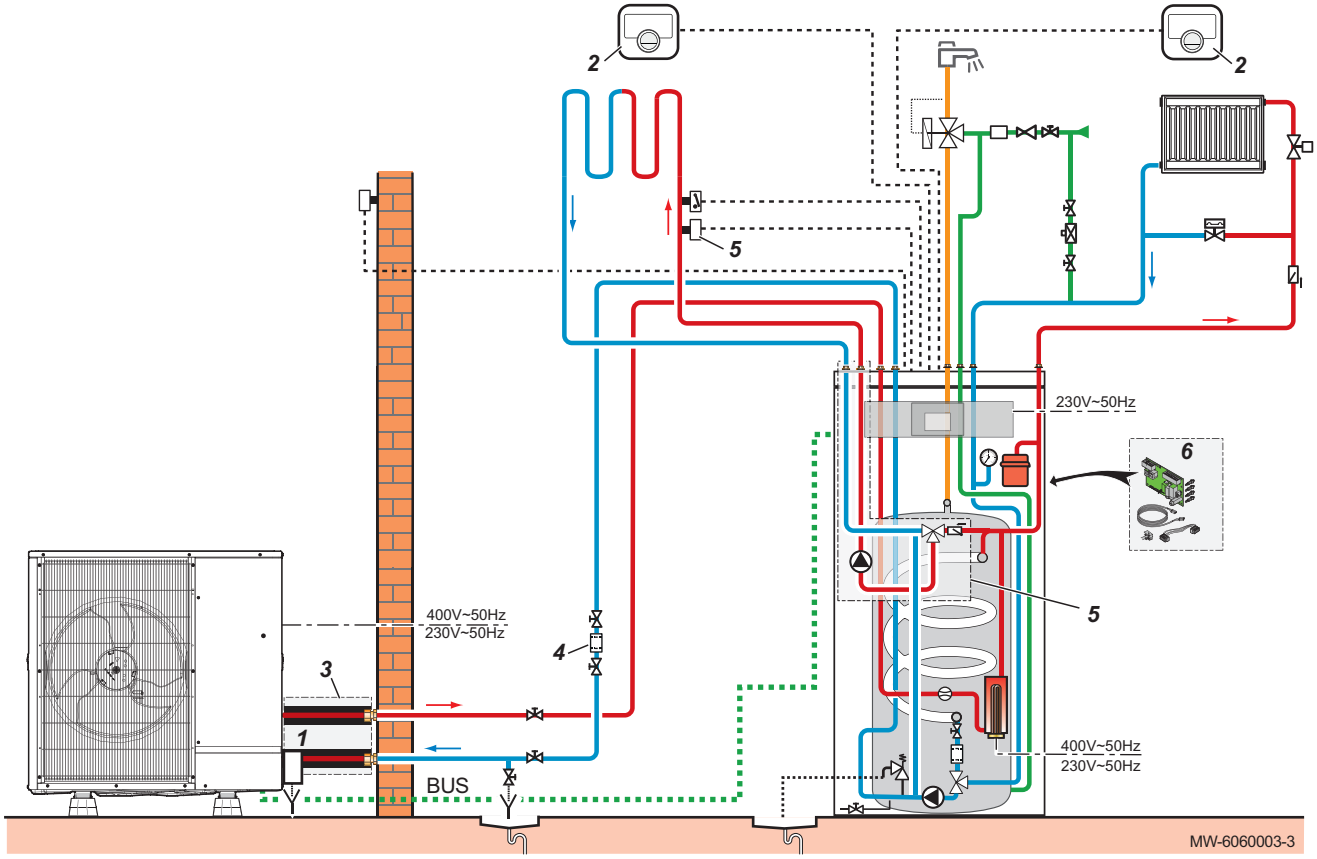

1 Antifreeze valve
2 eTwist connected thermostat
3 Insulated hose kit
4 Magnetic sieve filter
5 Second circuit mixing valve kit
6 Second circuit control system PCB kit

9.2.2 Carrying out the electrical connections and the parameter settings

Fig.66

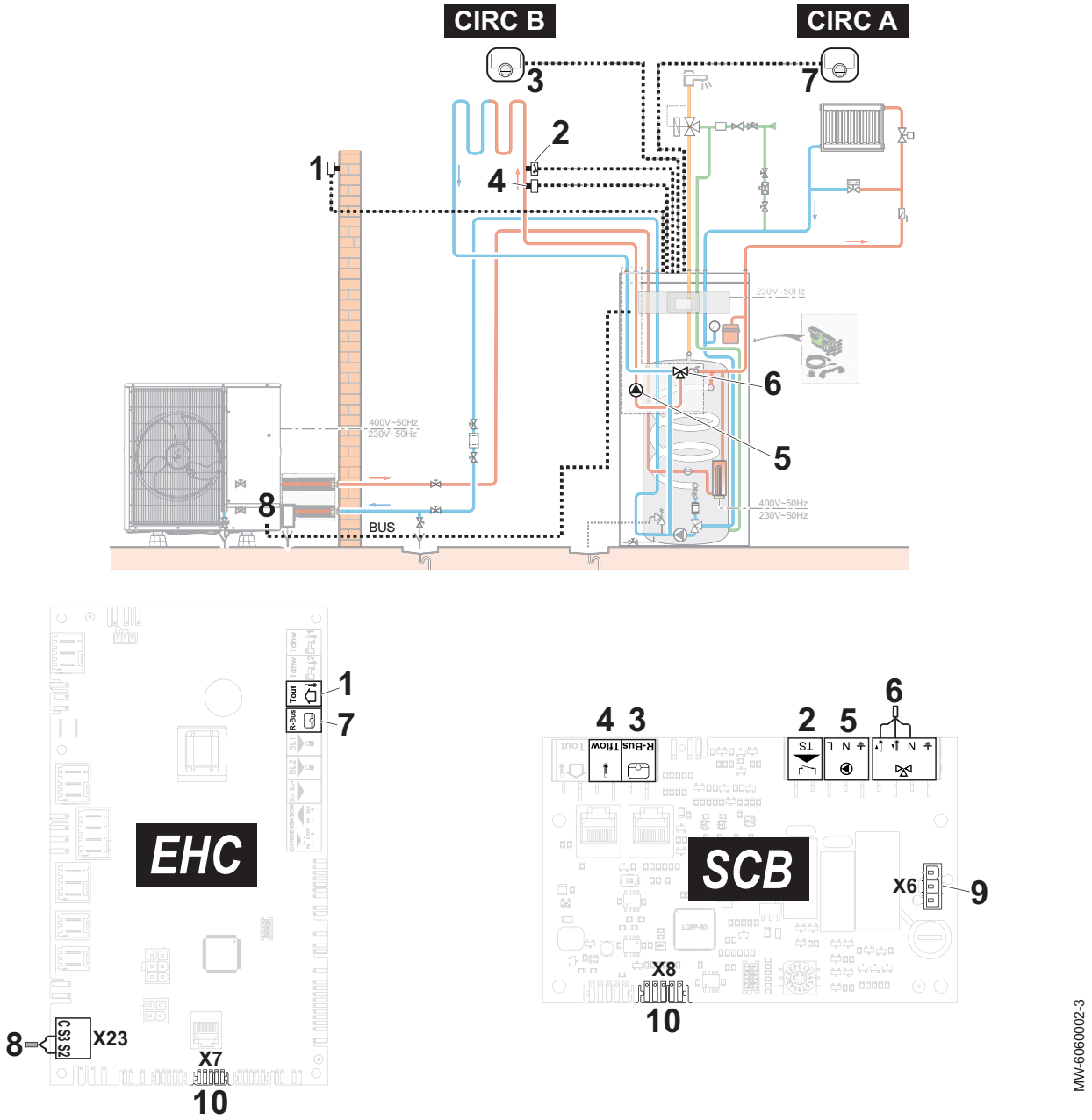

1 Outdoor temperature sensor
2 Safety thermostat for underfloor heating flow
3 eTwist connected thermostat for circuit B
4 Flow sensor on circuit B kit
5 Pump supply on circuit B kit
6 Three-way valve on circuit B kit
7 eTwist connected thermostat for circuit A
8 Outdoor unit bus connection
9 230 V power supply connection between the **PAC IF020–E** and **SCB-04** PCBs
10 BUS connection linking the **EHC–04** and **SCB-04** PCBs

1. Connect the accessories and options to the **EHC–04** PCB, respecting the 230-400 V and 0-40 V cable feed-throughs.
2. Connect the accessories and options to the **SCB-04** PCB, respecting the 230-400 V and 0-40 V cable feed-throughs.
3. Configure the parameters on circuit A.

Path for accessing radiator circuit parameters (Zone1)
> Installer > Installation setup > Zone1

Parameter		Description	Adjustment required
Zone Function CP020		Functionality of the zone	Direct (factory setting) This setting does not enable cooling.
Heat curve	**Zone Heating Curve** CP230	Value of the heating curve gradient.	Set the heating curve for circuit A with a gradient of 1.5 (for a radiator circuit) Adapt the values of the heating curve in order to obtain optimum comfort.
	MaxZoneTFlowSetpoint CP000	Maximum Flow Temperature setpoint zone	75 °C (factory setting) Adjust the temperature as required.

4. Configure the parameters on circuit B.

Path for accessing underfloor heating circuit parameters (Zone2)
☰ > Installer > Installation setup > Zone2

Parameter		Description	Adjustment required
Zone Function CP020		Functionality of the zone	• Mixing Circuit • Fan Convector Only these 2 settings are used for cooling.
Heat curve	**Zone Heating Curve** CP230	Value of the heating curve gradient.	Set it between 0.4 and 0.7 (for an underfloor heating circuit) Adapt the values of the heating curve in order to obtain optimum comfort.
	MaxZoneTFlowSetpoint CP000	Maximum Flow Temperature setpoint zone	40 °C Adjust the temperature as required.

5. Set the authorisation for cooling.

Access path
☰ > Installer > Installation setup > Air Src Heat Pump > Cooling

Parameter	Description	Adjustment required
Cooling mode AP028	Configuration of the cooling mode	Active cooling on

9.3 Installation with electrical backup, domestic hot water tank and underfloor heating

Fig.67

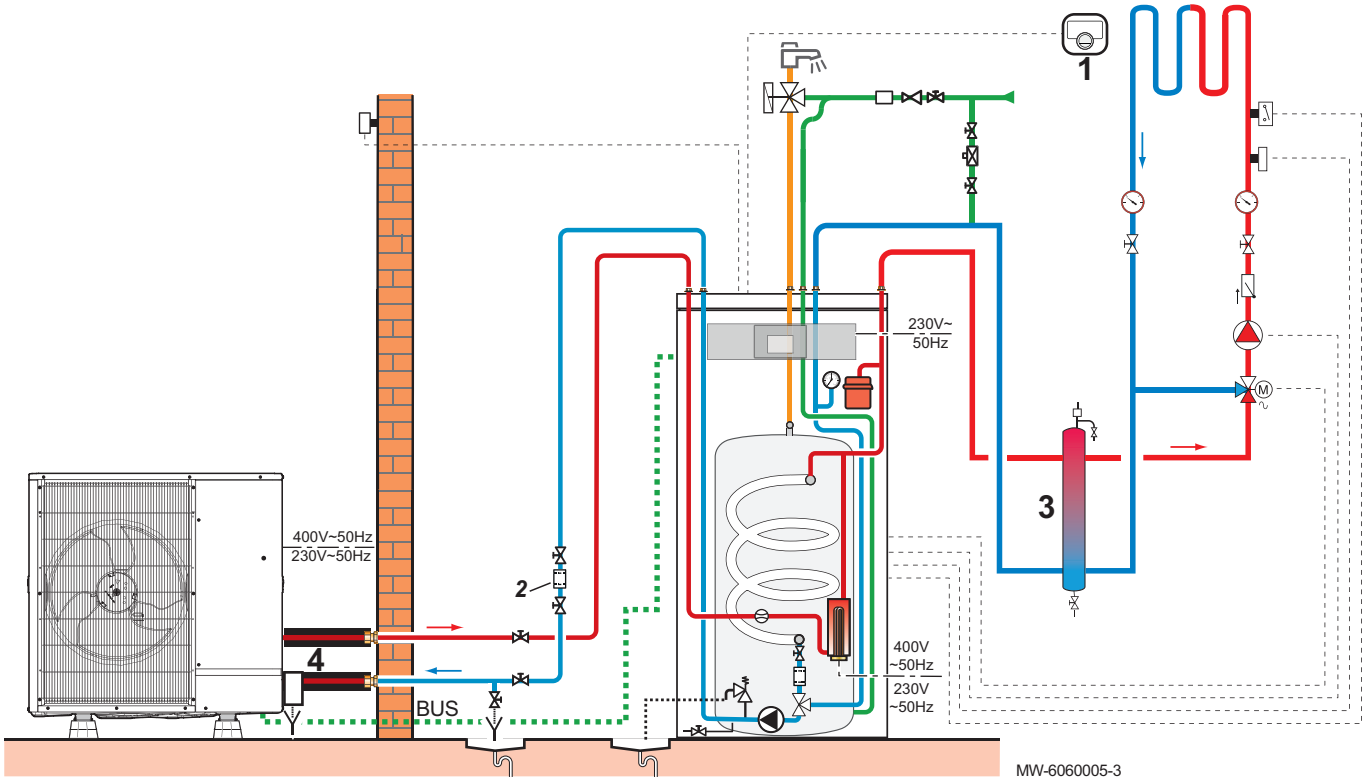

1 eTwist connected thermostat
2 Filter kit
3 Low-loss header
4 Antifreeze valve

9.3.1 Carrying out the electrical connections and the parameter settings

Fig.68

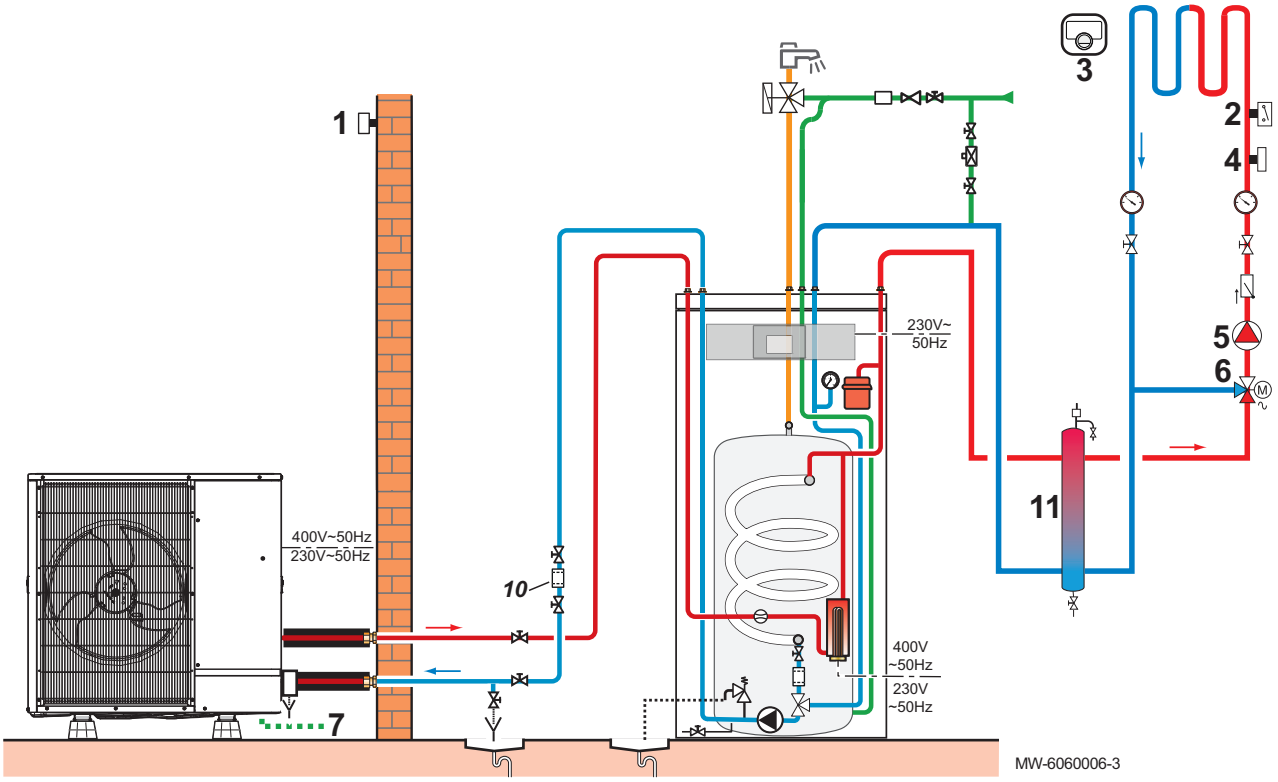

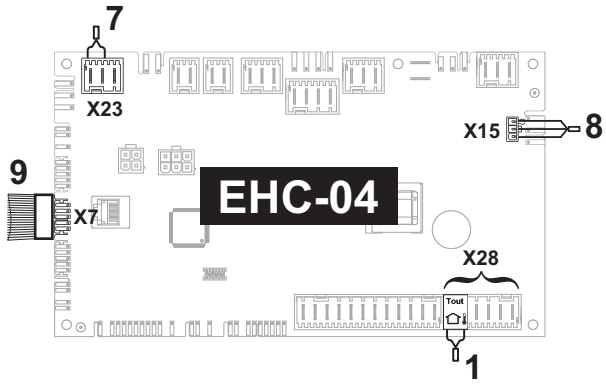

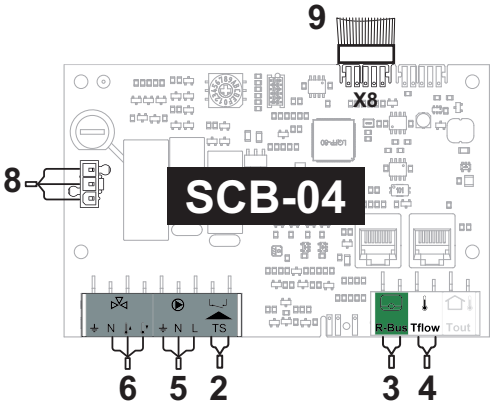

1 Outdoor temperature sensor
2 Safety thermostat for underfloor heating flow
3 Thermostat connected to circuit B (**SCB-04**)
4 Flow sensor on circuit B (**SCB-04**)
5 Pump power supply on circuit B (**SCB-04**)
6 Power supply of the three-way valve on circuit B (**SCB-04**)
7 Outdoor unit bus connection
8 230 V power supply connection between the **EHC–04** and **SCB-04** PCBs
9 BUS connection linking the **EHC–04** and **SCB-04** PCBs
10 Magnetic sieve filter
11 Low-loss header

1. Connect the accessories and options to the **EHC–04** PCB, respecting the 230-400 V and 0-40 V cable feed-throughs.
2. Connect the accessories and options to the **SCB-04** PCB, respecting the 230-400 V and 0-40 V cable feed-throughs.
3. Configure the parameters on circuit A.

Path for accessing radiator circuit parameters (Zone1)
> Installer > Installation setup > Zone1

Parameter		Description	Adjustment required
Zone Function CP020		Functionality of the zone	Direct (factory setting) This setting does not enable cooling.
Heat curve	**Zone Heating Curve** CP230	Value of the heating curve gradient.	Set the heating curve for circuit A with a gradient of 1.5 (for a radiator circuit) Adapt the values of the heating curve in order to obtain optimum comfort.
	MaxZoneTFlowSetpoint CP000	Maximum Flow Temperature setpoint zone	75 °C (factory setting) Adjust the temperature as required.

4. Configure the parameters on circuit B.

Path for accessing underfloor heating circuit parameters (Zone2)
☰ > Installer > Installation setup > Zone2

Parameter		Description	Adjustment required
Zone Function CP020		Functionality of the zone	• Mixing Circuit • Mixing Circuit Only these 2 settings are used for cooling.
Heat curve	**Zone Heating Curve** CP230	Value of the heating curve gradient.	Set it between 0.4 and 0.7 (for an underfloor heating circuit) Adapt the values of the heating curve in order to obtain optimum comfort.
	MaxZoneTFlowSetpoint CP000	Maximum Flow Temperature setpoint zone	40 °C Adjust the temperature as required.

5. Configure the heat pump parameters.

Access path
☰ > Installer > Installation setup > Air Src Heat Pump > Cooling

Parameter	Description	Adjustment required
Cooling mode AP028	Configuration of the cooling mode	Active cooling on
Buffer tank HP086	Enable the hydraulic management of the buffer tank	Yes

⇨ • Authorisation for cooling has been set.
• The buffer tank is being managed.

9.4 Installation with a swimming pool

9.4.1 Connecting a swimming pool

To control swimming pool heating, you will need the **SCB-04** optional PCB and a swimming pool thermostat. A low-loss header will also be required to ensure the heat pump operates correctly with a swimming pool.

The electrical connection of a swimming pool is made to the SCB-04 optional PCB.

Fig.69

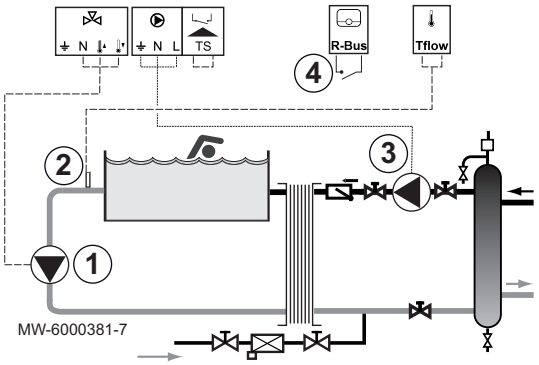

1. Connect the swimming pool secondary pump to the terminal block.
2. Connect the swimming pool thermostat to the TFlow terminal block.
3. Connect the swimming pool primary pump to the terminal block.
4. Connect the swimming pool heating cut-off control to the R-Bus terminal block.
   Factory configuration:
   - The thermostat contact is open when the swimming pool temperature is higher than the thermostat set point and the swimming pool is not heated. Only the frost protection function is still running.
   - The thermostat contact is closed when the swimming pool temperature is lower than the thermostat set point and the swimming pool is heated.

9.4.2 Configuring swimming pool heating

1. Follow the access path described below.

Access path
> Installer > Installation setup > Zone 2

2. Configure the parameters for zone 2.

Parameter	Description	Adjustment required
Zone Function CP020	Functionality of the zone	**Swimming pool**
Zone TSwimmPool setp CP540	Setpoint of swimming pool when Zone is configured on Swimming Pool	26 °C

Important
Backup operation follows the same logic as heating mode. If necessary, it is possible to block operation of the backups with the **BL** inputs.

10 Operation

10.1 Regional and ergonomic parameters

You can customise your appliance by modifying the parameters linked to your geographic location and the ergonomics of the user interface.

Fig.70

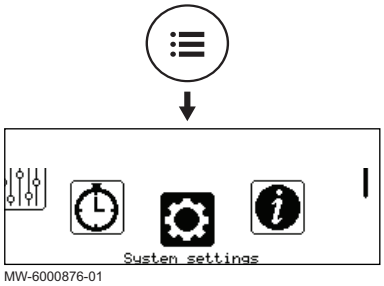

1. Press the button.
2. Select **System settings**.

3. Perform the required settings.

Tab.71 List of settings

Menu	Setting
Country and language	Select the country and language
Date and time	Set the date and time, then the automatic switch between summer and winter time
Installer details	Save the name and phone number of the installer
Activity names	Modify the name of activities used to program the heating or cooling periods
Display settings	Set the display settings: • Set the display contrast • Activate/deactivate the child lock

10.2 Activate/deactivate the child lock

Fig.71

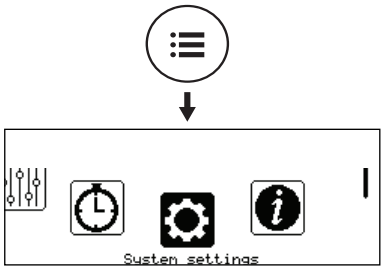

MW-6000876-01

The child lock prevents children from accidentally altering the settings.

1. Press the ☰ button.
2. Select **System settings**.
3. Select **Display settings**.
4. Modify the value of the **Child lock** parameter:

Yes	Child lock activated
No	Child lock deactivated

When the child lock is activated, you can temporarily unlock the display by briefly pressing the ☰ and ⊙ buttons simultaneously.

10.3 Personalising the zones

10.3.1 Definition of the term "zone"

Fig.72

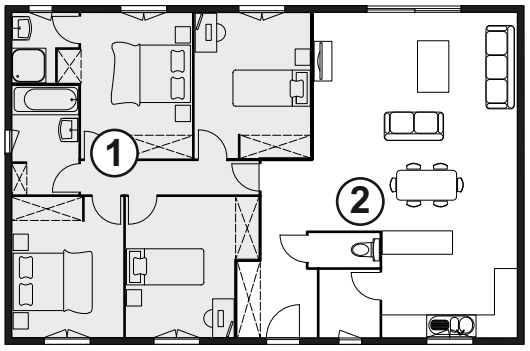

MW-1001145-2

Zone: term given to the different hydraulic circuits. It indicates several rooms served by the same circuit.

Tab.72 Example:

Key	Zone	Factory-set name
①	Zone 1	Zone 1
②	Zone 2	Zone 2

10.3.2 Changing the name and symbol for a zone

The name and symbol for a zone are factory-set. If required, you can personalise the name and symbol used for the zones in your installation.

Fig.73

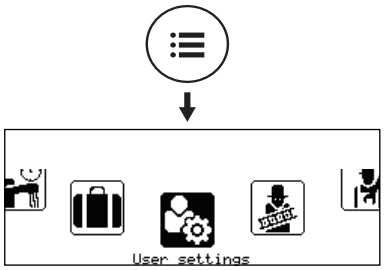

MW-6000865-02

1. Press the ☰ button.
2. Select **User settings**.

Fig.74

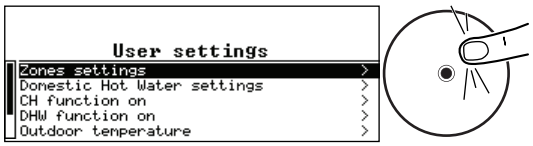

MW-6000877-1

3. Select **Zones settings**.
4. Select the zone to be changed.
5. Select **General** to access the parameters.
6. Change the name and/or the symbol for the zone. Refer to the table provided at the back of the manual.

10.4 Personalising the activities

10.4.1 Definition of the term "Activity"

Activity: this term is used when programming time ranges. It refers to the client's desired comfort level for different activities during the course of the day. One set point temperature is associated to each activity. The last activity of the day remains valid until the first activity of the following day.

Fig.75

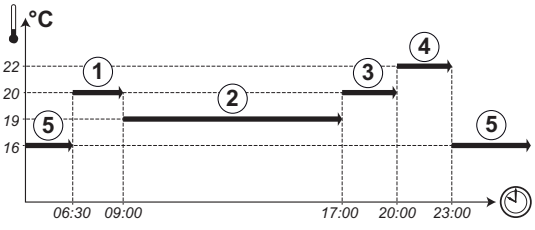

MW-1001144-2

Tab.73 Example

Start of the activity	Activity	Room temperature set-point
6:30	Morning ①	20 °C
9:00	Away ②	19 °C
17:00	Home ③	20 °C
20:00	Evening ④	22 °C
23:00	Sleep ⑤	16 °C

10.4.2 Changing the name of an activity

The name of the different activities is factory-set: Morning, Sleep, Home, Evening, Away and Custom. If you wish, you can personalise the name of the activities for all of the zones in your installation.

Fig.76

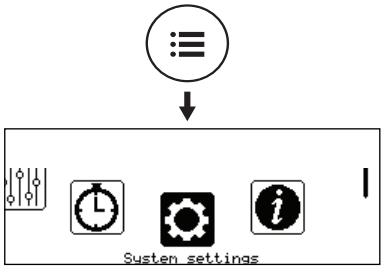

MW-6000876-01

1. Press the ☰ button.
2. Select **System settings**.

Fig.77

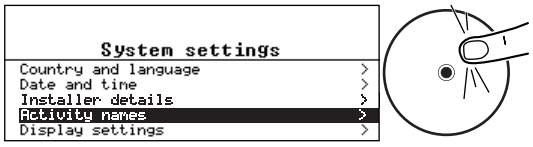

MW-6000878-2

3. Select **Activity names**.
4. Select **Set heating activity names** or **Set cooling activity names**.
5. Select the activity you want to change.
6. Change the name of the activity (10 characters max.) and confirm with **OK**.

10.4.3 Changing the temperature of an activity

The activities are used in the timer programming to define the temperature required at different times of the day. You can customise the temperature associated with each activity for each zone within your installation.

Fig.78

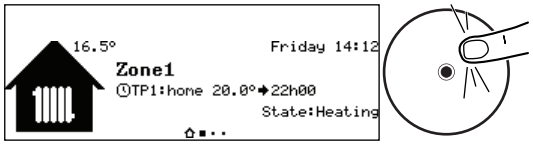

MW-6000861-02

1. From the home screen, access the screen for the relevant zone by turning the ⊙ button.
2. Press the ⊙ button.

Fig.79



MW-6000879-1

3. Select one of the following menus:
   - **Set heating temperatures** to change the temperature for the activities used for programming the heating mode
   - **Set cooling temperatures** to change the temperature for the activities used for programming the cooling mode
4. Select the activity you want to change.
5. Modify the temperature for the activity.

10.5 Room temperature for a zone

10.5.1 Selecting the operating mode

To set the room temperature for the different living zones, you can choose between five operating modes.

If you are using a programmable on/off thermostat, we recommend selecting **Manual** operating mode for the zone.

If you are using OpenTherm or R-bus, we recommend the **Programming** operating mode which enables the room temperature to be modulated according to your activities, thereby optimising your energy consumption.

1. From the home screen, access the screen for the relevant zone by turning the ⊙ button.
2. Press the ⊙ button.

Fig.80

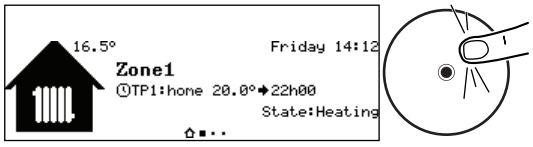

MW-6000861-02

Fig.81

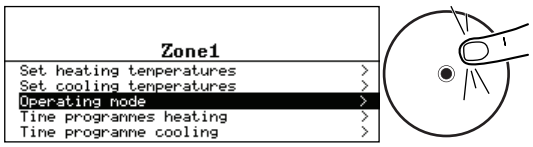

MW-6000874-1

3. Select **Operating mode**.

4. Select the desired operating mode:

Tab.74

Operating mode	Description
Programming	The room temperature is regulated according to the selected timer programme. Recommended mode.
Manual	The room temperature is constant.
Temporary temperature change	The room temperature is forced for a defined period.
Holiday	The room temperature is reduced during an absence period to save energy.
Frost protection	The selected zone within the installation is protected from frost in winter.

10.5.2 Activating and configuring a timer programme for heating

A timer programme can be used to vary the room temperature in a living zone depending on activities during the day. This can be programmed for each day of the week.

Fig.82

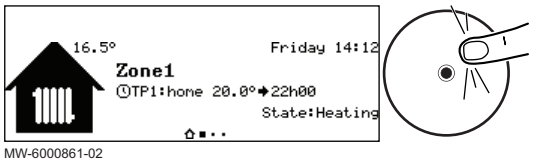

MW-6000861-02

1. From the home screen, access the screen for the relevant zone.
2. Press the ⊙ button.

Fig.83

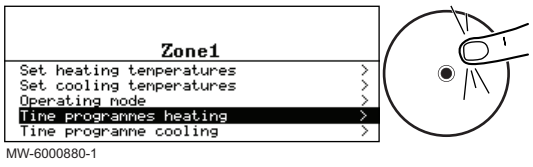

MW-6000880-1

3. Select **Time programmes heating**.
   ⇨ Three timer programmes are available. The programme that is currently active is marked with a tick.
4. To activate another timer programme, select **ZoneTimeProg Select**.

Fig.84

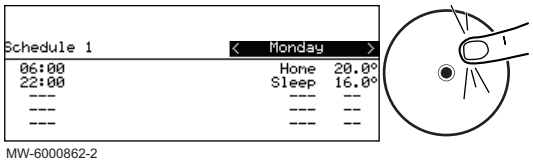

MW-6000862-2

5. To change the timer programming, select the programme you wish to change.
   ⇨ The programmed activities for Monday are displayed.
   The last activity of the day remains active until the first activity of the following day.
6. Select the day to be modified.
7. Carry out the following actions according to your needs:

Tab.75

Action	Procedure
Modify the timer settings for programmed activities.	• Select a programmed activity. • Press the ⊙ button. • Change the start time and/or the associated activity. • Select **Confirm** to save the modification.
Add a new time range.	• Move the cursor to an empty line. • Press the ⊙ button. • Select the start time for the activity. • Select the activity required at this time. • Select **Confirm** to save the new time range.
Deleting a programmed activity	• Select the activity you want to delete. • Press the ⊙ button. • Select **Delete** to delete the activity.
Copying programmed daily activities to other days	• Position the cursor on the **Copy to other days** line which appears at the end of the empty lines. • Press the ⊙ button. • Check the days of the week which are to follow the same timer programming as the current day. • Select **Confirm** to apply the current timer programme to all of the selected days.

10.5.3 Activating and configuring a timer programme for cooling

In the **Programming** operating mode, the Cooling timer programme is activated automatically when the average outdoor temperature over a 24-hour period has been greater than 22 °C. If you would prefer that this mode is triggered at a different temperature, ask your installer to modify this parameter in your installation or use the **Forced cooling mode** mode.

Important
To guarantee comfort in **Cooling** mode, the eTwist connected room unit must be installed.

The timer programme linked to the **Cooling** mode can be modified.

Fig.85

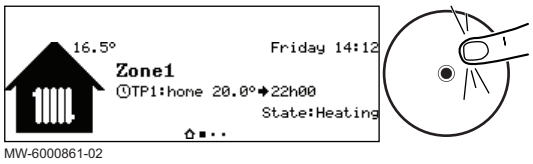

MW-6000861-02

1. From the home screen, access the screen for the relevant zone.
2. Press the ⊙ button.

Fig.86

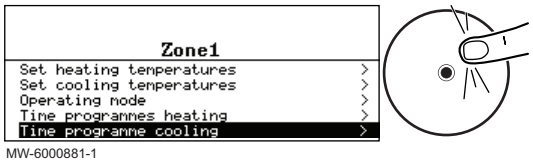

MW-6000881-1

3. Select **Time programme cooling**.
   ⇨ The programmed activities for Monday are displayed.
   The last activity of the day remains active until the first activity of the following day.

Fig.87

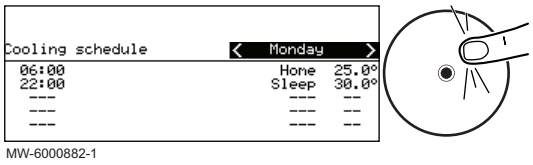

MW-6000882-1

4. Select the day to be modified.
5. Carry out the following actions according to your needs:

Tab.76

Action	Procedure
Modify the timer settings for programmed activities.	• Select a programmed activity. • Press the ⊙ button. • Change the start time and/or the associated activity. • Select Confirm to save the modification.
Add a new time range.	• Move the cursor to an empty line. • Press the ⊙ button. • Select the start time for the activity. • Select the activity required at this time. • Select Confirm to save the new time range.
Deleting a programmed activity	• Select the activity you want to delete. • Press the ⊙ button. • Select Delete to delete the activity.
Copying programmed daily activities to other days	• Position the cursor on the Copy to other days line which appears at the end of the empty lines. • Press the ⊙ button. • Check the days of the week which are to follow the same timer programming as the current day. • Select Confirm to apply the current timer programme to all of the selected days.

10.5.4 Changing the room temperature temporarily

Regardless of the operating mode selected for a zone, it is possible to modify the room temperature for a defined period. Once this time has elapsed, the selected operating mode will restart.

Fig.88

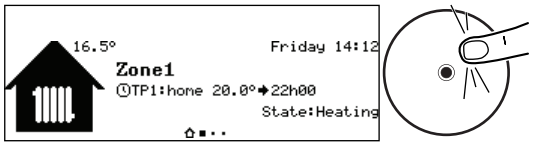

MW-6000861-02

1. From the home screen, access the screen for the relevant zone by turning the ⊙ button.
2. Press the ⊙ button.

Fig.89

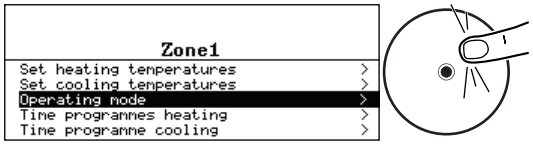

MW-6000874-1

3. Select **Operating mode**.

Fig.90

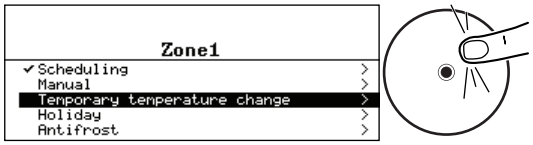

MW-6000883-1

4. Select **Temporary temperature change**.
5. Indicate the temperature required throughout the override period.
6. Indicate the time when the override will end.
7. Select **Confirm** to confirm the override.

10.6 Domestic hot water temperature

10.6.1 Selecting the operating mode

For the production of domestic hot water, you can choose between five operating modes. We recommend the **Programming** mode which enables domestic hot water production periods to be programmed according to your needs and optimises your energy consumption.

Fig.91



MW-6000863-2

1. From the home screen, access the screen for the relevant zone.
2. Press the ⊙ button.

Fig.92

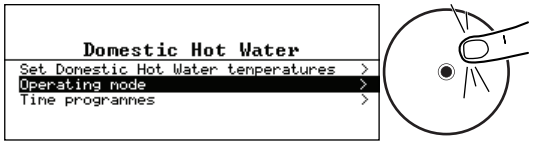

MW-6000884-1

3. Select **Operating mode**.
4. Select the desired operating mode:

Tab.77

Operating mode	Description
Programming	The domestic hot water is produced according to the defined timer programme.
Manual	The domestic hot water temperature remains at the comfort temperature permanently
Temporary temperature change	The production of domestic hot water is forced to the comfort temperature until the defined time
Holiday	The domestic hot water temperature is reduced during an absence period to save energy.
Frost protection	The installation and equipment are protected during the winter period.

10.6.2 Activating and configuring a timer programme for domestic hot water

A timer programme can be used to vary the domestic hot water temperature depending on activities during the day. This can be programmed for each day of the week.

Fig.93



MW-6000863-2

1. From the home screen, access the screen for the Domestic Hot Water zone.
2. Press the ⊙ button.

Fig.94

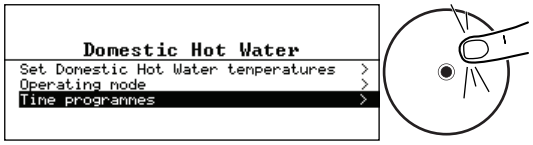

MW-6000885-1

3. Select **Time programmes**.
   ⇨ Three timer programmes are available. The programme that is currently active is marked with a tick.

Fig.95

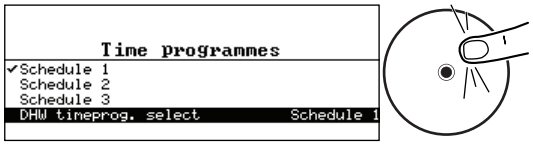

MW-6000886-1

4. To activate another timer programme, select **DHW timeprog. select**.

Fig.96

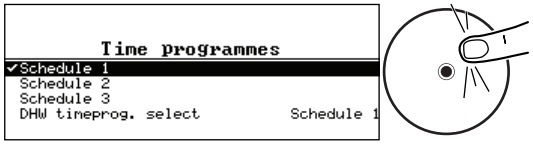

MW-6000887-1

5. To change the timer programming, select the programme you wish to change.
   ⇨ The programmed activities for Monday are displayed.
   The last activity of the day remains active until the first activity of the following day.

Fig.97

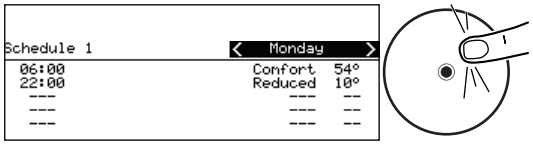

MW-6000864-2

6. Select the day to be modified.
7. Carry out the following actions according to your needs:

Tab.78

Action	Procedure
Modify the timer settings for programmed activities	• Select a programmed activity. • Press the ⊙ button. • Change the start time and/or the associated activity. • Select Confirm to save the modification.
Add a new time range	• Move the cursor to an empty line. • Press the ⊙ button. • Select the start time for the activity. • Select the activity required at this time. • Select Confirm to save the new time range.
Deleting a programmed activity	• Select the activity you want to delete. • Press the ⊙ button. • Select Delete to delete the activity.
Copying programmed daily activities to other days	• Position the cursor on the Copy to other days line which appears at the end of the empty lines. • Press the ⊙ button. • Check the days of the week which are to follow the same timer programming as the current day. • Select Confirm to apply the current timer programme to all of the selected days.

10.6.3 Forcing domestic hot water production (override)

Regardless of the selected operating mode, you can force domestic hot water production to the comfort temperature (**DHW comfort setpoint** parameter) until the required time.

Fig.98



MW-6000863-2

1. From the home screen, access the screen for the Domestic Hot Water zone.
2. Press the ⊙ button.

Fig.99

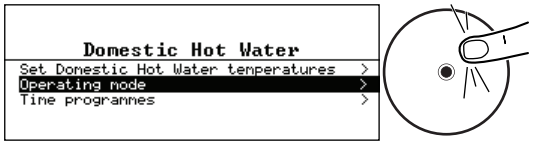

MW-6000884-1

3. Select **Operating mode**.

Fig.100

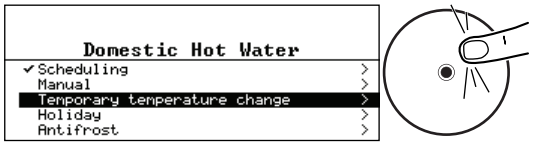

MW-6000888-1

4. Select **Temporary temperature change**.
5. Indicate the time when the override will end.
6. Select **Confirm** to confirm the override.

To cancel the override, select another operating mode.

10.6.4 Modifying the domestic hot water set point temperatures

The production of domestic hot water operates with two set point temperature parameters:

- **DHW comfort setpoint** : used in the **Programming**, **Manual** and **Temporary temperature change** modes
- **DHW reduced setpoint** : used in the **Programming**, **Holiday** and **Frost protection** modes.

You can change these set point temperature settings to adapt them to your needs.

Fig.101



MW-6000863-2

1. From the home screen, access the screen for the Domestic Hot Water zone.
2. Press the ⊙ button.

Fig.102



MW-6000889-1

3. Select **DHW temperature setting**.
4. Change the required set point temperature:
   - **DHW comfort setpoint**
   - **DHW reduced setpoint**

10.7 Managing the heating, cooling and domestic hot water production

10.7.1 Shutting off the heating and cooling

Your appliance will automatically regulate the heating and cooling based on the outdoor temperature. If you prefer, you can shut off the heating and cooling regardless of the outdoor temperature whilst maintaining production of domestic hot water.

Fig.103

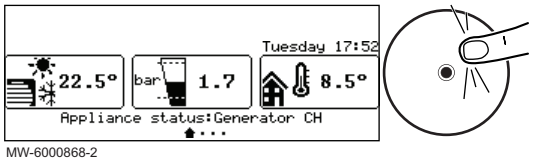

MW-6000868-2

1. From the home screen, access the screen for the relevant zone by turning the ⊙ selector.
2. Press the ⊙ selector.

Fig.104

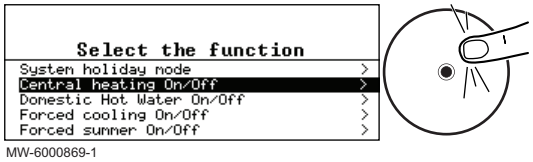

MW-6000869-1

3. Select **Central heating On/Off**.
4. Select the desired value:
   - **Off** : heating and cooling are shut off.
   - **On** : heating and cooling are automatically regulated based on the outdoor temperature.
5. Select **Confirm** to confirm the modification.

10.7.2 Forcing cooling

In the Programming operating mode, the Cooling timer programme is activated automatically when the average outdoor temperature has been greater than 22 °C. If you wish, you can force Cooling mode on regardless of the outdoor temperature.

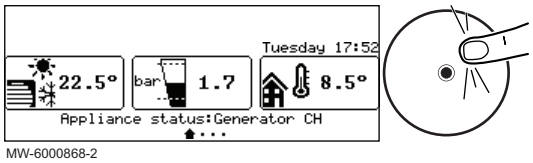

MW-6000868-2

1. From the home screen, press the ⊙ button.

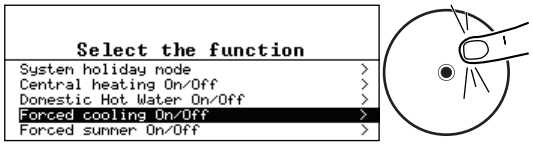

MW-6000870-1

2. Select **Forced cooling On/Off**.
3. Select the desired value:
   - **Yes** : cooling is active, regardless of the outdoor temperature.
   - **No** : the system automatically activates cooling based on the outdoor temperature.
4. Select **Confirm** to confirm the modification.

10.7.3 Shutting off the heating in summer

Your appliance will automatically regulate the heating based on the outdoor temperature. If you prefer, you can shut off the heating regardless of the outdoor temperature whilst continuing to use the domestic hot water and cooling functions.

Fig.105

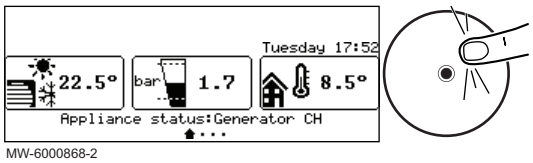

MW-6000868-2

1. From the home screen, press the ⊙ button.

Fig.106

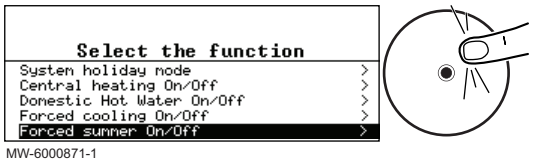

MW-6000871-1

2. Select **Forced summer On/Off**.
3. Select the desired value:
   - **Off** : the system automatically regulates the heating based on the outdoor temperature.
   - **On** : the heating is off. Domestic hot water production is maintained. Cooling is activated when the activation conditions are fulfilled.
4. Select **Confirm** to confirm the modification.

10.7.4 Shutting off domestic hot water production

If you wish, you can shut off the domestic hot water production whilst continuing to use the heating and cooling functions.

Fig.107

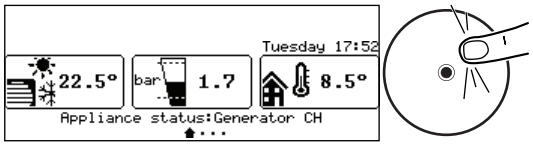

MW-6000868-2

1. From the home screen, press the ⊙ button.

Fig.108

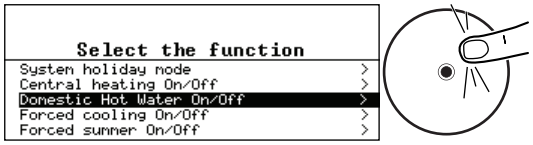

MW-6000872-1

2. Select **Domestic Hot Water On/Off**.
3. Select the desired value:
   - **Off** : domestic hot water production is shut off. Heating and cooling are maintained.
   - **On** : domestic hot water production is active.
4. Select **Confirm** to confirm the modification.

10.7.5 Periods of absence or going on holiday

If you will be absent for several weeks, you can reduce the room temperature and domestic hot water temperature in order to save energy. For this, activate the **System holiday mode** operating mode for all zones, including the domestic hot water, or the **Holiday** operating mode for each zone individually.

■ Activating holiday mode for all zones

If you are planning on being away for several weeks, activate the **System holiday mode** operating mode for all zones, including domestic hot water. The room setpoint temperature is lowered to 6 °C and the domestic hot water setpoint is set to the DHW reduced setpoint parameter.

Fig.109

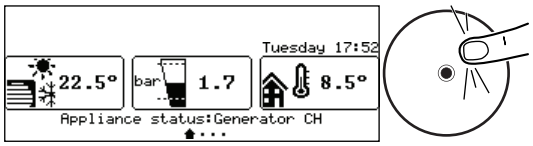

MW-6000868-2

1. From the home screen, press the ⊙ button.

Fig.110

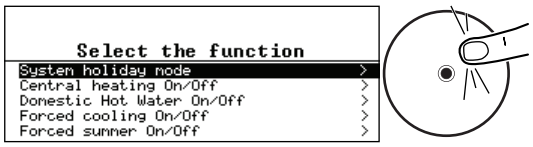

MW-6000873-1

2. Select **System holiday mode**.
3. Enter the start and end dates and times for the absence period.
4. Select **Confirm** to confirm the setting.

■ Activating holiday mode for a zone

If you will not be using a zone within your home for several weeks, you can reduce the room temperature in this zone to save energy. To do this, activate the **System holiday mode** operating mode for this zone.

Fig.111

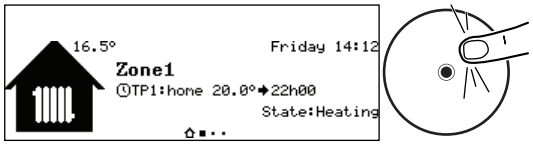

MW-6000861-02

1. From the home screen, access the screen for the relevant zone by turning the ⊙ button.
2. Press the ⊙ button.

Fig.112

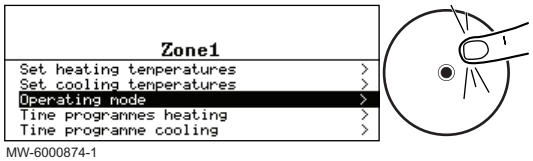

MW-6000874-1

3. Select **Operating mode**.

Fig.113

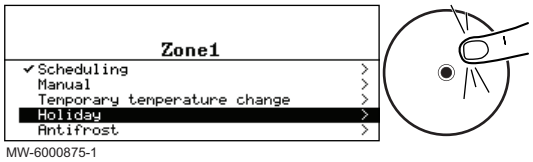

4. Select **Holiday**.
5. Enter the start and end dates and times for the absence period.
6. Indicate the temperature required throughout the absence period.

Important
For a domestic hot water zone, the setpoint temperature during an absence period is set automatically to the DHW reduced setpoint parameter.

7. Select **Confirm** to confirm the setting.

10.8 Monitoring the energy consumption

If your installation is equipped with an energy meter, you can monitor your energy consumption.

Fig.114

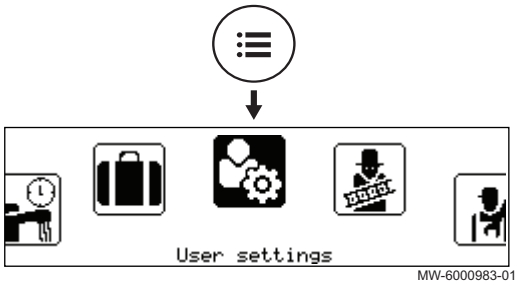

1. Press the ☰ button.
2. Select **User settings**.

Fig.115

Fig.116

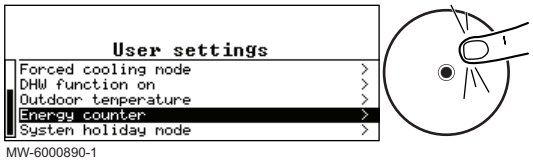

3. Select **Energy counter**.
   ⇨ The energy consumed since the last energy consumption meter reset is displayed:

Tab.79

Parameter	Description
CH Energy Consumed AC005	Energy consumed for central heating
DHW energy consumed AC006	Energy consumed for domestic hot water
Cool Energy consumed AC007	Energy consumed for cooling
CH Energy delivered AC008	Thermal energy delivered for central heating
DHW Energy delivered AC009	Thermal energy delivered for domestic hot water
Cool Energy deliver. AC010	Thermal energy delivered for cooling
Total EnergyDeliver.	Total thermal energy delivered

10.9 Starting and stopping the heat pump

10.9.1 Starting the heat pump

1. Switch on the outdoor unit, the indoor unit and the immersion heater simultaneously.

Important
- The outdoor unit is powered via its circuit breaker.
- The indoor unit is powered via the circuit breaker and the ON/OFF button.
- The immersion heater is powered via its circuit breaker.

⇨ The heat pump will begin an automatic vent cycle (which lasts approx. three minutes), run each time the power is switched on. If there is a problem, an error message is displayed on the home screen.

2. If an error message is displayed on the home screen, contact the installer.
3. Check the hydraulic pressure in the installation indicated on the user interface.

Important
Recommended hydraulic pressure between 1.5 and 2.0 bar.

Important
The pressure measurement may differ slightly between the pressure gauge and the user interface when the circulating pump is running.

10.9.2 Shutting down the heat pump

The heat pump must be shut down in certain situations, for example during any intervention on the equipment. In other situations, such as an extended absence period, we recommend that the **System holiday mode** operating mode is used in order to benefit from the heat pump anti-blocking function and to protect the installation from frost.

To shut down the heat pump:

1. Switch off the power to the outdoor unit.
2. Switch off the power to the indoor unit.

11 Maintenance

11.1 Precautions to be taken before maintenance operations

Important
Maintenance shall be performed only as recommended by the manufacturer.

An annual inspection with a leak-tightness check in accordance with prevailing standards is obligatory.

Maintenance operations are important for the following reasons:

- To guarantee optimum performance.
- To extend the life of the equipment.
- To provide an installation which offers the user optimum comfort over time.

Caution
Only qualified professionals are authorised to carry out maintenance work on the heat pump and the heating system.

Caution
Before working on the refrigeration circuit, switch off the appliance and wait a few minutes. Certain items of equipment such as the compressor and the pipes can reach temperatures in excess of 100°C and high pressures, which may cause serious injuries.

Danger of electric shock
Before any work, switch off the mains electricity to the heat pump and the electrical backup if present.

Danger of electric shock
Check the discharge from the capacitors of the outdoor unit.

11.2 List of inspection and maintenance operations

Tab.80 Checking the operation of the installation

Check
Heat pump and backup in heating mode
Heat pump and backup in cooling mode
User interface
Fault history
Operating time and number of start-ups for backups
Operating time and number of start-ups for compressor

Tab.81 Tightness tests

Check
Leak-tightness of the heating circuit
Leak-tightness of the DHW circuit
Leak-tightness of the hydraulic circuit separation circuit

Tab.82 Inspecting the safety devices

Check	Operations to be carried out
Heating circuit safety valve	Actuate the safety valve to check that it is operating correctly.
Expansion vessel	Check and adjust the inflation pressure.

Tab.83 Other inspection and maintenance operations

Check	Operations to be carried out
Electrical connections	Replace any faulty parts and cables.
Screws and nuts	Check all screws and nuts (cover, support, etc.) are correctly tightened.
Insulation	Replace any damaged sections of insulation
Filters	Clean the filters. See dedicated chapter.
Flow rate in heating mode	See dedicated chapter.
Flow rate in domestic hot water mode	See dedicated chapter.
Hydraulic pressure	Recommended hydraulic pressure: 1.5 bar to 2 bar
Titanium impressed current anode	Maintenance-free

Check	Operations to be carried out
Casing	Clean the outside of the appliance using a damp cloth and a mild detergent.
Heat pump and installation	• Regularly check that the air inlets and outlets are not obstructed by fireign bodies such as leaves. • In winter, check to ensure these openings are not blocked with snow.

11.3 Checking the fluid for the hydraulic circuit separation kit (glycol kit)

Check the pH of the glycol contained in the plate heat exchanger during the annual inspection.

Use a water-propylene glycol mix with a maximum of 40% propylene glycol.

Important
Replace the heat-transporting fluid once the installation has been running for 5 years.

1. Check the pH level of the heat-transporting fluid in the hydraulic circuit separation kit (glycol kit).
   The pH level of the heat-transporting fluid must be between 7.5 and 8.5 (inclusive).
2. Check the operating pressure in the circuit for the hydraulic circuit separation kit (glycol kit).
   The recommended operating pressure is 1.5 bar.
   If a top-up is necessary, top up with a mixture identical to the product used initially.
3. Carry out a leak-tightness test.

11.4 Cleaning the magnetic sieve filters

11.4.1 Flush the magnetic sieve filters (quick annual maintenance)

The magnetic filters on the heating circuit return prevent the plate heat exchanger from becoming clogged. These must be cleaned every year to ensure that water is able to flow correctly within the installation.

1. Switch the appliance off and hydraulically isolate the magnetic filter using the stop valves for the heating circuits.
2. Remove the magnet from the filter.
   ⇨ The magnetic particles will drop to the bottom of the filter.
3. Connect the pipe (supplied in the documentation bag) onto the filter tap. Place a container at the end of the pipe.

Fig.117

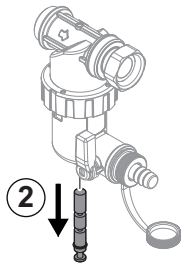

MW-1002014-1

Fig.118

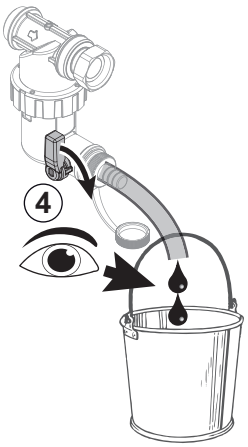

4. Gradually open the tap, and let the water drain out until the sludge is removed or until it is fully drained: the water should run clean and clear. Close the tap again. If necessary, open and close the valve several times to create surges, and clean the filter better.
5. Refit the magnet. Pushing it in fully.
6. Open the stop valves on the heating circuits.
7. Power the appliance back on.
8. Check the pressure in the installation. If the pressure is less than 1.5 bar, top up the water.
9. Check the flow rate after activating a heating demand.

Important
If the flow rate of the installation is below the target flow rate, proceed to remove and fully clean the filter.

11.4.2 Full cleaning of the magnetic sieve filters

If the flow rate of the installation is below the target flow rate after the simple annual cleaning of the filter, proceed to remove and fully clean it.

1. Switch the appliance off and hydraulically isolate the magnetic filter using the stop valves for the heating circuits.
2. Connect the pipe supplied with the documentation on the filter tap. Place a container at the end of the pipe.
3. Gradually open the tap and let the water drain out.
4. Unscrew the magnetic filter using the maintenance tool provided in the accessories bag and remove all the filter parts.
5. Carefully clean the various filter parts with clean water until all the impurities are removed. The screen mesh must not be clogged.

Fig.119

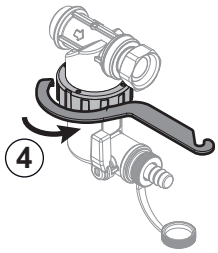

Fig.120

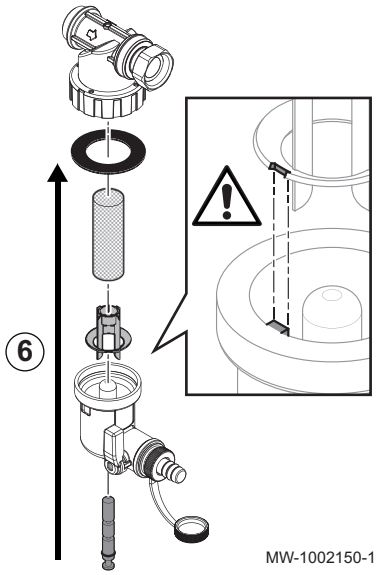

6. Refit the filter observing the keyway of the plastic part.

Caution
Risk of breakage: align the notch with the pin.

7. Check that the gasket is correctly positioned before tightening with the key.
8. Re-commission the appliance and check the pressure and the flow rate.

Important
If the flow rate of the installation remains below the target flow rate, proceed to drain the appliance and clean it fully.

11.5 Impressed current anode

No maintenance operations are required on an impressed current anode.

Important
The appliance's user interface must remain switched on to ensure that the impressed current anode can operate. Failure to comply with this instruction may cause deterioration to the water heater tank and void its warranty.

11.6 Check the hydraulic pressure

If the hydraulic pressure of your heating system installation is too low or too high, malfunctions and faults may appear.

Recommended hydraulic pressure: from 1.5 bar to 2 bar when cold.

1. Check the hydraulic pressure displayed on the user interface.
2. If the hydraulic pressure is too low, top up the water.
3. If topping up is needed more than twice per year, check that the heating system is leak-tight.

11.7 Checking operation of the appliance

You can force the heating or cooling mode for the heat pump and back-up in order to check that they are working correctly.

1. Follow the access path described below.

Access path
> Installer > Commissioning > Test mode > Func. test status.

2. Select the operating mode to be tested.

11.8 Replacing the user interface battery

If the indoor unit is switched off, the user interface battery takes over to keep the correct time.

The battery must be replaced when the time is no longer saved.

1. Open and remove the user interface door.
2. Remove the front panel by pulling firmly at both sides.
3. Tilt the user interface module bracket forwards and hang it in a horizontal position.

Fig.121

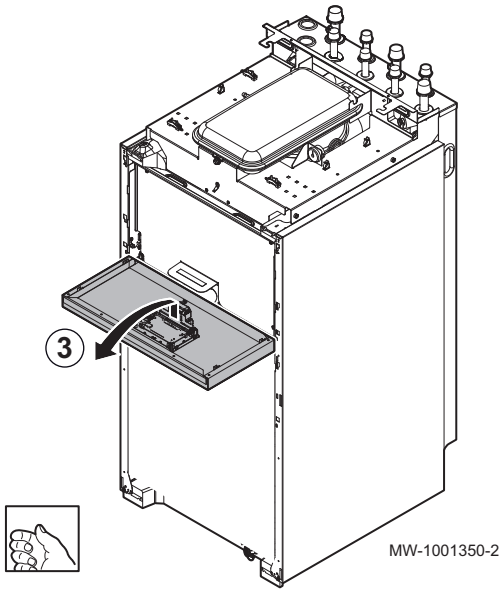

Important
Keep a good hold of the user interface module in order not to pull out or disconnect the electrical connections in the user interface module.

Fig.122

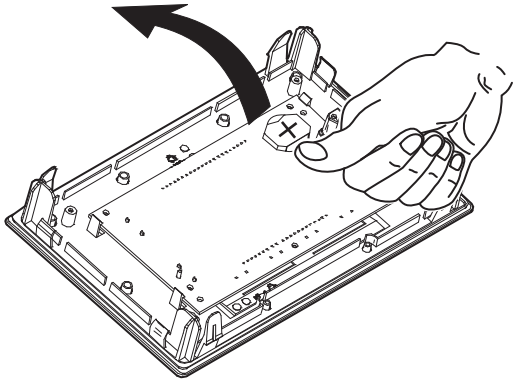

MW-3000475-01

4. Remove the battery located in back plate of the user interface by pushing it gently forwards.
5. Insert a new battery.

Important
Battery type:
- CR2032, 3 V
- Do not use rechargeable batteries.
- Never put batteries in your mouth for any reason, otherwise this may result in accidental swallowing. Ingesting batteries may result in choking and/or poisoning.
- Do not discard used batteries in the dustbin. Take them to an appropriate collection place.

6. Re-assemble everything.

11.9 Drain the appliance on the heating circuit side

Fig.123

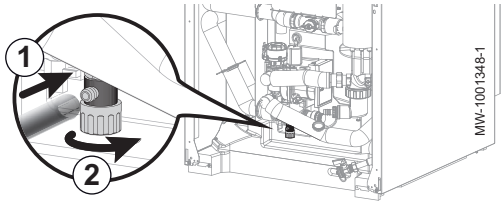

1. Connect a suitable hose (internal diameter: 8 mm) to the drain cock on the heating circuit.

Important
A hose can be found in the accessories bag.

2. Open the drain valve.
3. Await the complete drainage of the heating circuit.

11.10 Draining the domestic hot water circuit

Fig.124

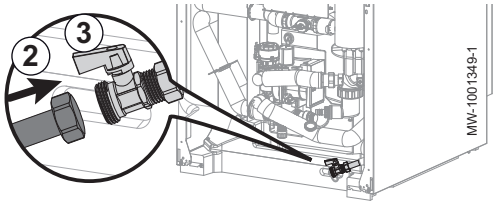

1. Close the system's water inlet valve.
2. Connect a suitable hose fitted with a 3/4” female connection to the drain valve on the domestic hot water circuit.
3. Open the drain valve on the domestic hot water circuit.
4. Open a hot water tap to completely drain the indoor module.

12 Troubleshooting

See also
Protecting the outdoor unit from frost with a manual drain solution, page 115

12.1 Resetting the safety thermostat

Danger
Before any work, switch off the power supply to the indoor unit and the immersion heater.

If you suspect that the safety thermostat was triggered:

1. Cut off the power supply to the indoor unit and the electric heating element by lowering the circuit breakers on the electric panel.
2. Locate and correct the cause of power cut before resetting the safety thermostat.
3. Remove the front panel of the indoor unit and the protective cap.

Fig.125

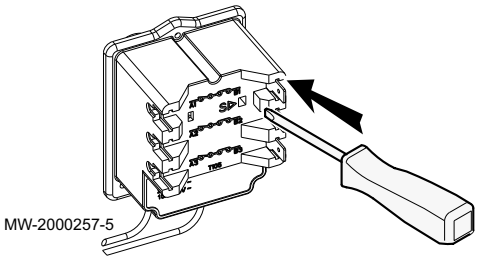

4. If the safety thermostat has been triggered, use a flat-headed screwdriver to press the reset button on the thermostat. If not, look for an alternative cause for the power to the electric heating element having been cut.
5. Refit the front panel on the indoor unit and the protective cover.
6. Switch the indoor unit and the electric heating element back on.

12.2 Resolving operating errors

When your appliance malfunctions, the display switches from its initial colour to red and may flash. A message is displayed with an error code on the home screen.

This error code is important for the correct and rapid diagnosis of the type of malfunction and for any technical assistance that may be needed.

If an error occurs:

1. Make a note of the code displayed on the screen.
2. Remedy the problem described by the error code or contact the installer.
3. Switch off the outdoor unit and the indoor unit.
4. Switch on the indoor unit then the outdoor unit to check that the cause of the error has been removed.
5. If the code is displayed again, contact the installer.

12.2.1 Types of error code

The user interface can display three types of error code:

Tab.84

Type of code	Code format	Colour of the display
Warning	Axx.xx	Continuous red
Blockage	Hxx.xx	Continuous red
Lockout	Exx.xx	Flashing red

12.2.2 Alarm codes linked to the EHC–04 PCB

An alarm code is a temporary heat pump status, resulting from the detection of an anomaly. If an alarm code still remains after several automatic start-up attempts, the system goes into fault mode.

Tab.85 List of alarm codes

Error code	Message	Description
A02.06	Water Press Warning	Water Pressure Warning active
A02.22	System flow warning	System water flow warning active
A02.55	Inval or miss SerNR	Invalid or missing device serial number

12.2.3 Error codes linked to the EHC–04 PCB

An error code is a temporary status, resulting from the detection of a heat pump anomaly. The user interface attempts to restart the heat pump automatically until it switches on.

When one of the following codes is displayed and the heat pump cannot restart automatically, contact a maintenance technician.

Tab.86 List of temporary error codes

Error code	Message	Description
H00.00	TFlow Open	Flow temperature sensor is either removed or measures a temperature below range • Check the wiring between the main PCB and the sensor • Check that the sensor has been correctly fitted • Check the Ohmic value of the sensor • Replace the sensor if necessary
H00.01	TFlow Closed	Flow temperature sensor is either shorted or measures a temperature above range
H00.16	**DHW sensor Open**	Domestic Hot Water tank temperature sensor is either removed or measures a temperature below range • Check the wiring between the central unit PCB and the sensor. • Check that the sensor has been fitted properly. • Check the Ohmic value of the sensor. • Replace the sensor if necessary.
H00.17	**DHW sensor Closed**	Domestic Hot Water tank temperature sensor is either shorted or measures a temperature above range • Check the wiring between the central unit PCB and the sensor. • Check that the sensor has been fitted properly. • Check the Ohmic value of the sensor. • Replace the sensor if necessary.
H00.32	**TOutside Open**	Outside temperature sensor is either removed or measures a temperature below range • Check the wiring between the central unit PCB and the sensor. • Check that the sensor has been fitted properly. • Check the Ohmic value of the sensor. • Replace the sensor if necessary.
H00.33	**TOutside Closed**	Outside temperature sensor is either shorted or measures a temperature above range • Check the wiring between the central unit PCB and the sensor. • Check that the sensor has been fitted properly. • Check the Ohmic value of the sensor. • Replace the sensor if necessary.
H00.34	**TOutside Missing**	Outside temperature sensor was expected but not detected • Check the wiring between the central unit PCB and the sensor. • Check that the sensor has been fitted properly. • Check the Ohmic value of the sensor. • Replace the sensor if necessary.
H00.40	**WaterPressureOpen**	Water pressure sensor is either removed or measures a temperature below range • Check the wiring between the central unit PCB and the sensor. • Check that the sensor has been fitted properly. • Check the Ohmic value of the sensor. • Replace the sensor if necessary.
H00.47	**HP flow sensor removed or below range**	Heat pump flow temperature sensor is either removed or measures a temperature below range • Check the wiring between the central unit PCB and the sensor. • Check that the sensor has been fitted properly. • Check the Ohmic value of the sensor. • Replace the sensor if necessary.
H00.48	**THp Flow Closed**	Heat pump flow temperature sensor is either shorted or measures a temperature above range • Check the wiring between the central unit PCB and the sensor. • Check that the sensor has been fitted properly. • Check the Ohmic value of the sensor. • Replace the sensor if necessary.
H00.51	**THp Return Open**	Heat pump return temperature sensor is either removed or measures a temperature below range

Error code	Message	Description
H00.52	**THp Return Closed**	Heat pump return temperature sensor is either shorted or measures a temperature above range • Check the wiring between the central unit PCB and the sensor. • Check that the sensor has been fitted properly. • Check the Ohmic value of the sensor. • Replace the sensor if necessary.
H00.57	**T DHW Top Open**	Domestic Hot Water top temperature sensor is either removed or measures a temperature below range • Check the wiring between the central unit PCB and the sensor. • Check that the sensor has been fitted properly. • Check the Ohmic value of the sensor. • Replace the sensor if necessary.
H00.58	**T DHW Top Closed**	Domestic Hot Water top temperature sensor is either shorted or measures a temperature above range • Check the wiring between the central unit PCB and the sensor. • Check that the sensor has been fitted properly. • Check the Ohmic value of the sensor. • Replace the sensor if necessary.
H02.02	**Wait Config Number**	Waiting For Configuration Number Waiting for configuration parameters to be entered • Configure CN1 / CN2 depending on the output of the outdoor unit installed (CNF menu). Central unit PCB replaced: heat pump not configured
H02.03	**Conf Error**	Configuration Error The configuration parameters entered are incorrect. • Configure CN1 / CN2 depending on the output of the outdoor unit installed (CNF menu).
H02.04	**Parameter Error**	Parameter Error • Restore the factory settings. • If the error is still present: change the central unit PCB.
H02.05	**CSU CU mismatch**	CSU does not match CU type • Software change (software number or version parameter inconsistent with the memory).
H02.07	**Water Press Error**	Water Pressure Error active • Check the hydraulic pressure in the heating circuit. • Check the wiring between the central unit PCB and the pressure sensor. • Check the connection of the pressure sensor.
H02.09	**Partial block**	Partial blocking of the device recognized **BL** input on the central unit PCB terminal block open • Check the contact on the **BL** input. • Check the wiring. • Check the AP001 and AP100. parameters.
H02.10	**Full Block**	Full blocking of the device recognized **BL** input on the central unit PCB terminal block open • Check the contact on the **BL.** input • Check the wiring. • Check the AP001 and AP100. parameters.

Error code	Message	Description
H02.23	**System flow error**	System water flow error active Flow problem Insufficient flow: open a radiator valve. The circuit is clogged: • Check that the filters are not obstructed and clean them if necessary. • Clean and flush the installation, No circulation: • Check that the valves and thermostatic valves are open, • Check that the circulating pump is working, • Check the wiring, • Check the pump supply: if the pump does not work, replace it. Too much air: completely vent the indoor unit and the installation for optimum running. Incorrect wiring: check the electrical connections. Flow meter: • Check the electrical connections and the direction of the flow meter (arrow to the right). • Replace the flow meter if necessary
H02.36	**Funct device lost**	Functional device has been disconnected No communication between the central unit PCB and the additional circuit PCB • Check the connection of the supply cable between the PCBs. • Check the connection of the **BUS** cable between the PCBs. • Run automatic detection.
H02.37	**Uncritic device lost**	Uncritical device has been disconnected No communication between the central unit PCB and the additional circuit PCB • Check the connection of the supply cable between the PCBs. • Check the connection of the **BUS** cable and the PCBs. • Run automatic detection.
H02.60	**Unsupported function**	The zone doesn't support the selected function
H06.01	**HP Unit Failure**	Heat Pump Unit Failure occured Heat pump outdoor unit fault • Check the wiring between the central unit PCB and the communication **bus** on the outdoor unit. • Check the connection of the communication cable between the central unit PCB and the interface PCB. • Check the connection of the supply cable between the central unit PCB and the interface PCB. • Check the connection of the outdoor unit supply cable.

12.2.4 Fault codes linked to the EHC–04 PCB

A lockout code signals a major anomaly affecting the heating system: the heating system is shut down as the safety conditions are not fulfilled.

Two operations are necessary for the system to resume normal operation:

1. Remove the causes of the anomaly.
2. Acknowledge the error message manually on the user interface.

The heat pump will only resume normal operation once the causes of the fault have been eliminated by the installer.

Tab.87 List of fault codes

Error code	Message	Description
E00.00	TFlow Open	Flow temperature sensor is either removed or measures a temperature below range
E00.01	Flow temp sensor shorted or above range	Flow temperature sensor is either shorted or measures a temperature above range

Error code	Message	Description
E02.13	Blocking Input	Blocking Input of the Control Unit from device external environment Input **BL** open. • Check the wiring. • Check the component connected to the **BL.** contact • Check the component connected to the AP001 and AP100. contact
E02.24	System flow locking active	System water flow locking active Insufficient flow: open a radiator valve The circuit is clogged: • Check that the filters are not obstructed and clean them if necessary. • Clean and flush the installation. No circulation: • Check that the valves and thermostatic valves are open. • Check that the filters are not obstructed. • Check that the circulating pump is working. • Check the wiring. • Check the pump supply: if the pump does not work, replace it. Too much air • Completely vent the indoor unit and the installation for optimum performance. • Check that the automatic air vents are properly open (also check the hydroblock). Completely vent the indoor unit and the installation for optimum performance. Incorrect wiring: check the electrical connections. Flow meter: • Check the electrical connections and the direction of the flow meter (arrow to the right). • Replace the flow meter if necessary.

12.3 Displaying and clearing the error memory

The error memory stores the 32 most recent errors. You can check the details of each error and then clear it from the error memory.

To display and clear the error memory:

1. Follow the access path described below to access this information.

Access path
☰ > Installer > Error history

⇨ The list of the 32 most recent errors is displayed with the error code, a short description and the date.

2. Select the error for which you want to view the details and press the ⊙ button.
3. To clear the error memory, press and hold the ⊙ button.
4. Select **Confirm** to clear the error memory.

12.4 Accessing information on the hardware and software versions

Information about the hardware and software versions of the different appliance components is stored in the user interface.

1. Follow the access path described below to access this information.

Access path
☰ > Version information

2. Select the component for which you would like to see the version information.

Component	Description
EHC–04	Main PCB for the heat pump
MK2.1	User interface
SCB-04	Additional PCB for controlling the additional heating and domestic hot water circuits
BLE Smart Antenna	PCB for Bluetooth® communication

13 Decommissioning and disposal

13.1 Decommissioning procedure

To decommission the heat pump temporarily or permanently:

1. Switch off the heat pump.
2. Shut off the electrical power supply to the heat pump: outdoor unit and indoor unit.
3. Switch off the power supply to the electric heating element, if present.
4. Drain the central heating system.

13.2 Disposal and recycling

Fig.126



MW-3000179-03

Warning
Removal and disposal of the heat pump must be carried out by a qualified professional in accordance with prevailing local and national regulations.

1. Switch off the heat pump.
2. Cut the mains supply to the heat pump.
3. Recover the refrigerant in accordance with prevailing regulations.

Important
Do not allow the refrigerant to escape into the atmosphere.

4. Disconnect the refrigerant connections.
5. Close the water mains.
6. Drain the installation.
7. Dismantle all hydraulic connections.
8. Dismantle the heat pump.
9. Scrap or recycle the heat pump in accordance with prevailing local and national regulations.

14 Energy savings

Energy-saving advice:

- Do not block ventilation outlets.
- Do not cover the radiators. Do not fit curtains in front of the radiators.
- Install reflective panels behind the radiators to prevent heat losses.
- Insulate the pipes in rooms that are not heated (cellars and lofts).
- Close the radiators in rooms not in use.
- Do not run hot (or cold) water pointlessly.
- Install an energy-saving shower head, which can save up to 40 % energy.
- Take showers rather than baths. A bath consumes twice as much water and energy.

15 Spare parts

15.1 Indoor unit

Fig.127 Base frame

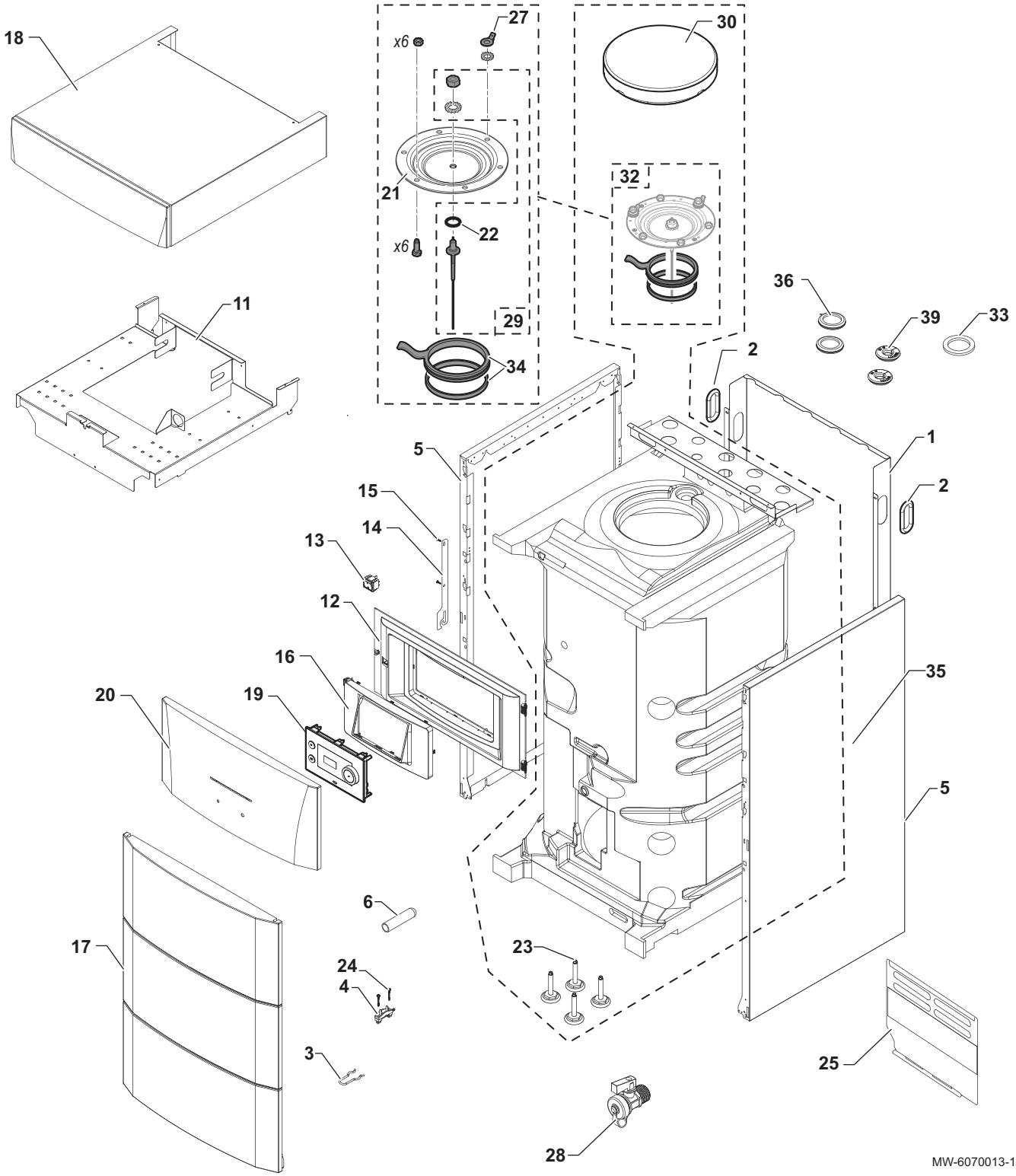

Tab.88 List of spare parts for the base frame

Marker	Reference	Description
1	7657368	Rear panel
2	BRO303892	Feed-through 112x56

Marker	Reference	Description
3	200019786	Spring kit for front panel (x10)
4	7618888	Traction arrester device
5	300024463	Side panel
6	95365613	Contact spring for sensor pocket
11	7681887	Expansion vessel bracket
12	7615287	Complete control panel ADVANCE
13	300024488	White bipolar switch
14	7619159	Control panel bracket
15	7684459	EJOT KB 35x12 screw kit (x10)
16	7616624	Black user interface bracket
17	200019243	Complete front panel ADVANCE
18	7675087	Top panel (complete)
19	7773505	Control panel with HMI-RMA display
20	7627159	ADVANCE flap
21	89490548	Enamelled hatch
22	300014305	O-ring 14x4 EPDM
23	7657308	Adjustable foot M8x35x60 (x4)
24	7610590	EJOT WN 5451 screw 25x15
25	7619590	Preheater protection - electrical version
27	99100577	Ground ring with lug
28	94902073	1/2" drain valve
29	200011817	Impressed current anode ACI-BDR
30	300024943	Insulation, top hatch
32	200022461	Complete hatch T.A.S - D112
33	95013062	Green gasket 30x21x2
34	89705511	Gasket kit, Ø 112 (7 mm) + Retainer ring, 5 mm
35	7787560	Complete tank
36	7685542	Membrane grommet, Ø 42
39	7617171	Pipe grommet, Ø 18

Fig.128 Control panel

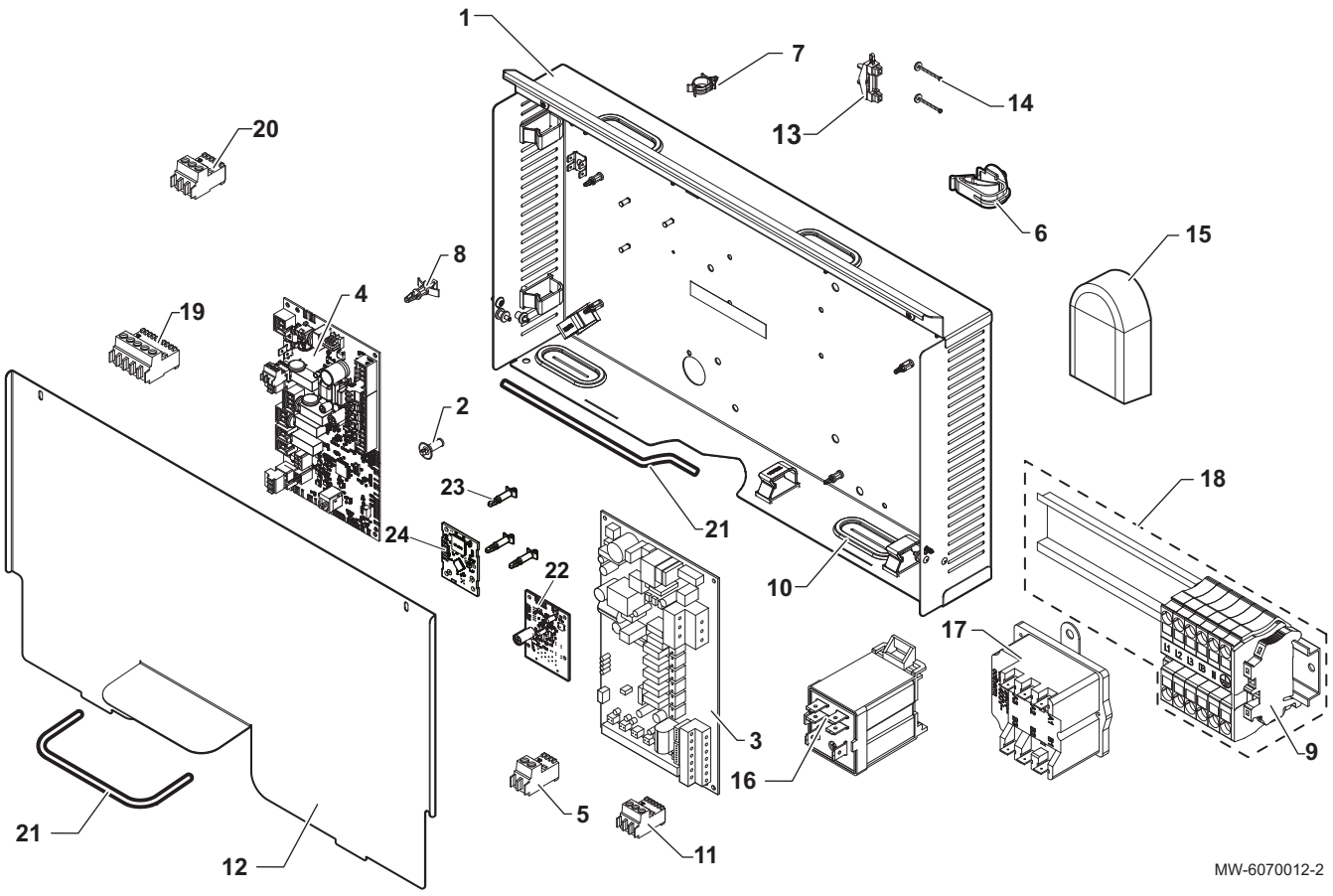

Tab.89 List of spare parts for the control panel

Marker	Reference	Description
1	7673581	Control panel base
2	7626821	RICHCO spacer LCBS
3	7726144	PAC IF020–E interface PCB
4	7646936	EHC–04 central unit PCB
5	7632095	Green 2-pin BUS connector
5	7632096	White 2-pin connector
6	7643731	Cable way
7	95320950	Cable clamp to clip
8	96550354	RICHCO LCBS spacer
9	7608561	WAGO 249–116 end stop
10	7681470	Oblong grommet membrane
11	300009074	Yellow 3-pin connector
11	7674749	White 3-pin connector
12	7675721	Cover for PCBs
13	95320187	Cable clamp 222.01.0087
14	95740600	Yellow CB Z 3.5X25 screw
15	95362450	Outdoor temperature sensor AF60
16	7611483	Support with FINDER relay
17	200018815	COTHERM BSDP 0002 thermostat kit + syringe
18	7621071	Electrical backup terminal block
19	200009251	RAST5 3 PTS VS connector
20	300009070	2-pin outdoor temperature sensor connector
21	BRO193722	PVC 6.5x9.5 edge protection profile
22	300028319	ACI-BDR PCB

Marker	Reference	Description
23	7750941	3.18 PCB spacer
24	7715094	BLE Smart Antenna Bluetooth card

Fig.129 Harnesses

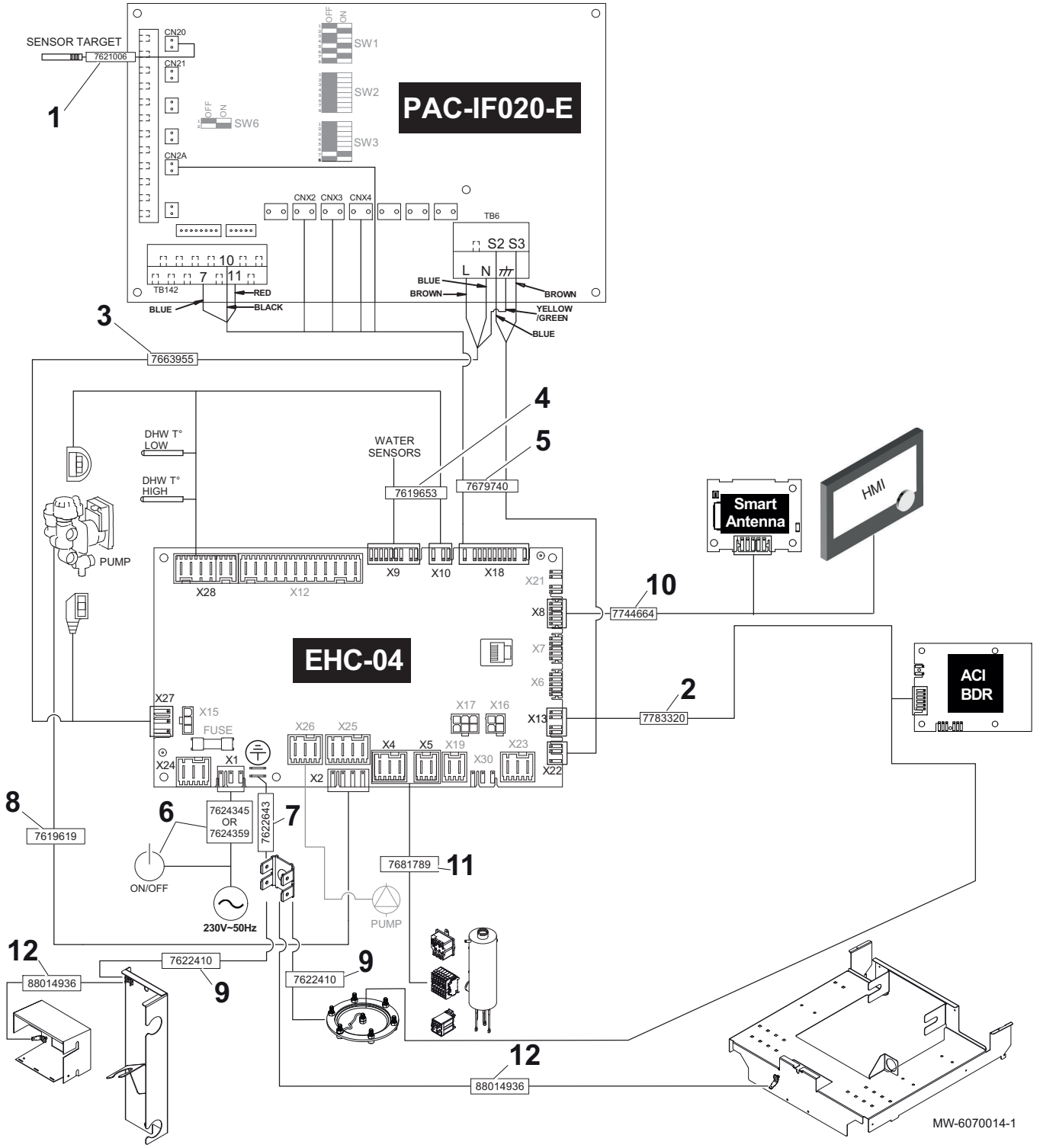

Tab.90 Spare parts list for the harnesses

Marker	Reference	Description
1	7621006	FTC liquid sensor, red
2	7783320	ACI-BDR anode power supply cable
3	7663955	Power supply cable harness for PCBs
4	7619653	Sensor harness

Marker	Reference	Description
5	7679740	PAC IF020–E cable harness
6	7624345	Main harness + ON/OFF button
7	7622643	PCB earthing cable (complete)
8	7619619	Cable harness for three-way valve internal power supply
9	7622410	Earthing cable (complete)
10	7744664	L-Bus cable, 1380 mm
11	7681789	Preheater harness
12	88014936	Earth wire

Fig.130 Hydraulic circuit

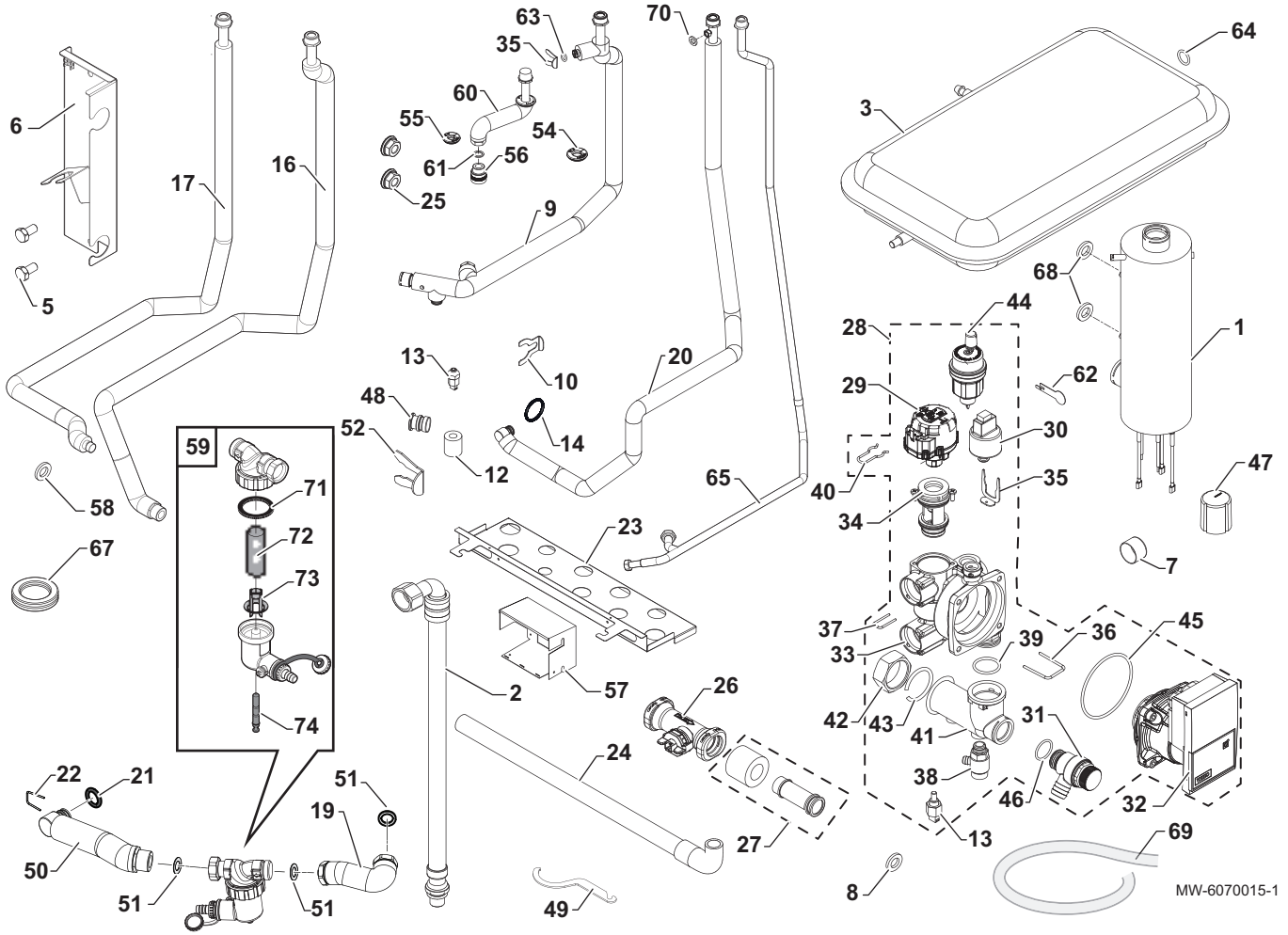

Tab.91 List of spare parts for the hydraulic circuit

Marker	Reference	Description
1	7618852	Preheater, 3/6/9 kW
2	300025392	DN8 3/8" - 1/2" straight hose
3	S62753	Expansion vessel RP 250 - capacity 8 litres
5	95610593	Screw H M10x20 6.8 ZN8
6	7723271	Pipe support
7	S62733	Pressure gauge
8	95013059	Green gasket Ø 18.5x12x2
9	7657028	Heating flow pipe (complete)
10	300023113	Pin for DN20
12	7623411	PT1000 temperature sensor insulation
13	7609871	Temperature sensor PT1000
14	7775597	O-ring, Ø 21.89x2.62 EPDM

Marker	Reference	Description
16	7719741	Flow pipe to outdoor unit (complete)
17	7719508	Return pipe from outdoor unit (complete)
19	7705515	Complete filter tank pipe
20	7676850	Complete heating return pipe
21	95023311	EPDM O-ring, Ø 21x3.5
22	7611475	Pin 25x2.5
23	7681889	Pipe bracket
24	7682224	Valve discharge hose (complete)
25	95890434	Serrated base nut H M8
26	300022989	Flow meter, HUBA DN20
27	7622042	Flow meter collector pipe (complete)
28	7675590	Complete hydroblock
29	7675593	Three-way valve motor
30	7611586	HUBA pressure switch
31	7611577	3-bar safety valve
32	7606561	YONOS circulating pump motor
33	7607701	Hydroblock body
34	7675592	Three-way valve cartridge
35	7611607	Safety valve pin
36	7607673	Retaining pin 28.5x3
37	7611606	Pressure switch clip
38	7606586	Drain valve
39	7607684	O-ring 25.07x2.62 EPDM
40	7611585	Three-way valve pin
41	7616569	Collector
42	7622530	Removable nut 1"
43	7622531	Ring nut 1"
44	7606593	OTMA automatic air vent
45	7606572	O-ring Ø 68x4
46	7101096	O-ring gasket 17.86x2.62 mm
47	0303384	Protective cap for pressure gauge
48	300025325	Quick connection T-plug
49	7706481	Maintenance key
50	7705513	Complete hydroblock filter pipe
51	95013062	Gasket Ø 30x21x2
52	300024235	Locking pin, Ø 10
54	7617311	Pipe grommet, Ø 22
55	7617171	Pipe grommet, Ø 18
56	7605675	MF 3/4” dielectric union
57	7618899	Preheater support
58	95013062	Gasket Ø 30x21x2
59	7709998	Magnetic filter
60	7657436	Domestic hot water flow pipe
61	95013060	Green gasket, Ø 24x17x2
62	300023286	Bulb blocking pin
63	95023308	EPDM O-ring 9.19x2.62
64	95013058	Gasket Ø 14x8x2
65	7657485	Domestic cold water pipe
67	30001936	Grommet membrane, Ø 29x37x44–2
68	7622178	Plastic washer M8x1
69	94994711	Silicone pipe, Ø 8x12
70	BRO349558	5x11x2 gasket

Marker	Reference	Description
71	7715766	Gasket
72	7715767	Filter
73	7715768	Plastic insert
74	7715769	Magnet + O-ring

16 Appendix

16.1 Risk of an electrical fault

In the event of a prolonged electrical fault during negative outdoor temperatures, there is a risk that the hydraulic circuits will freeze, which could cause the outdoor unit to malfunction.

In these conditions, the water must be drained from the heating circuit in contact with the outdoor unit before it can freeze. Two solutions are possible:

- An automatic solution using a thermostatic antifreeze valve
- A manual solution with isolation valves, and a drain valve

Caution
For an extended absence period while on holiday, or for a secondary residence, only the automatic solution with an antifreeze valve will provide the outdoor unit with a sufficient level of protection.

If you opt for an automatic solution with an antifreeze valve, this must be placed as close as possible to the outdoor unit, and must have the following properties:

- Valve opening at an outdoor temperature of + 3°C or below
- Sufficient flow rate to drain the installation before it can freeze

16.2 Protecting the outdoor unit from frost with a manual drain solution

Fig.131

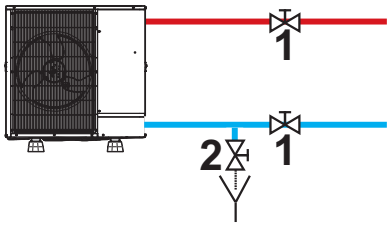

MW-6000943-1

If you opt for a manual drain solution with a drain valve and isolation valves, the following must be performed if there is an electrical fault during negative outdoor temperatures:

1. Close the isolation valves **1** to isolate the outdoor unit from the indoor unit.
2. Open the drain valve **2** for the outdoor unit circuit, and drain this part of the circuit. The outdoor unit is protected from frost.
3. When the power supply returns, top the outdoor unit heating circuit back up with water and check the heat pump is working correctly.

See also
Filling the system, page 47
Maintenance and repair work, page 11
Troubleshooting, page 102

16.3 Name and symbol of the zones

Tab.92

Factory-set name	Factory-set symbol	Customer-set name and symbol	
Zone1			
Zone2			

16.4 Name and temperature of the activities

Tab.93 Name and temperature of the activities for heating

Activities	Factory-set name	Factory-set temperature	Name and temperature defined by the customer	
Activity 1	**Sleep**	16 °C		
Activity 2	**Home**	20 °C		
Activity 3	**Away**	6 °C		
Activity 4	**Morning**	21 °C		
Activity 5	**Evening**	22 °C		
Activity 6	**Custom**	20 °C		

Tab.94 Name and temperature of the activities for cooling

Activities	Factory-set name	Factory-set temperature	Name and temperature defined by the customer	
Activity 1	**Sleep**	30 °C		
Activity 2	**Home**	25 °C		
Activity 3	**Away**	25 °C		
Activity 4	**Morning**	25 °C		
Activity 5	**Evening**	25 °C		
Activity 6	**Custom**	25 °C		

16.5 Product fiche and package fiche

16.5.1 Product fiche

Tab.95 Product fiche for heat pump combination heaters

		MONO AWHP 6 MR	MONO AWHP 8 MR	MONO AWHP 8 TR	MONO AWHP 11 TR
Space heating - Temperature application		Medium	Medium	Medium	Medium
Water heating - Declared load profile		L	L	L	L
Seasonal space heating energy efficiency class under average climate conditions		A++	A++	A++	A++
Water heating energy efficiency class under average climate conditions		A	A	A	A
Rated heat output under average climate conditions *(Prated or Psup)*	kW	6	9	9	10
Space heating - Annual energy consumption under average climate conditions	kWh GJ(1)	3674	4933	4941	6012
Water heating - Annual energy consumption under average climate conditions	kWh GJ(1)	972	981	981	1150
Seasonal space heating energy efficiency under average climate conditions	%	132	139	139	134
Water heating energy efficiency under average climate conditions	%	105.00	104.00	104.00	89.00
Sound power level L_{WA} indoors(2)	dB	41	41	41	41
Ability to off-peak hours functioning(1)		No	No	No	No
Rated heat output, under **colder - warmer** climate conditions	kW	4 – 6	5 – 9	5 – 9	7 – 10
Space heating - Annual energy consumption, under **colder - warmer** climate conditions	kWh GJ(1)	3136 – 1791	4579 – 2587	4618 – 2590	6207 – 3023

		MONO AWHP 6 MR	MONO AWHP 8 MR	MONO AWHP 8 TR	MONO AWHP 11 TR
Water heating - Annual energy consumption, under **colder - warmer** climate conditions	kWh(3) GJ(4)	1529 – 1285	1196 – 1008	1196 – 1008	1361 – 1144
Seasonal space heating energy efficiency, under **colder - warmer** climate conditions	%	107 – 159	106 – 169	104 – 167	108 – 169
Water heating energy efficiency, under **colder - warmer** climate conditions	%	83.00 – 117.00	82.00 – 117.00	82.00 – 117.00	74.00 – 121.00
Sound power level L_{WA} outdoors	dB	58	58	58	60

(1) For gas heat pumps only
(2) If applicable.
(3) Electricity
(4) Fuel

See
For specific precautions on assembly, installation and maintenance: see the "Safety Instructions" chapter

See also
Compatible heating devices, page 14

16.5.2 Product fiche – Temperature controller

Tab.96 Product fiche for the temperature controller

	Unit	HMI-RMA
Class		II
Contribution to space heating energy efficiency	%	2

16.5.3 Package fiche

Important
'Medium-temperature application' means an application where the heat pump space heater or heat pump combination heater delivers its declared capacity for heating at an indoor heat exchanger outlet temperature of 55 °C.

Fig.132 Package fiche for medium-temperature heat pumps indicating the space heating energy efficiency of the package

Seasonal space heating energy efficiency of heat pump

(1) 'I' %

Temperature control

from fiche of temperature control

Class I = 1%, Class II = 2%, Class III = 1.5%, Class IV = 2%, Class V = 3%, Class VI = 4%, Class VII = 3.5%, Class VIII = 5%

(2) + %

Supplementary boiler

from fiche of boiler

Seasonal space heating energy efficiency (in %)

(- 'I') x 'II' = ± (3) %

Solar contribution

from fiche of solar device

Collector size (in m²) | Tank volume (in m³) | Collector efficiency (in %) | Tank rating (1): A* = 0.95, A = 0.91, B = 0.86, C = 0.83, D - G = 0.81

('III' x + 'IV' x) x 0.45 x (/100) x = + (4) %

(1) If tank rating is above A, use 0.95

Seasonal space heating energy efficiency of package under average climate

(5) %

Seasonal space heating energy efficiency class of package under average climate

G	F	E	D	C	B	A	A+	A++	A+++
<30%	≥30%	≥34%	≥36%	≥75%	≥82%	≥90%	≥98%	≥125%	≥150%

Seasonal space heating energy efficiency under colder and warmer climate conditions

Colder: (5) - 'V' = % Warmer: (5) + 'VI' = %

The energy efficiency of the package of products provided for in this fiche may not correspond to its actual energy efficiency once installed in a building, as this efficiency is influenced by further factors such as heat loss in the distribution system and the dimensioning of the products in relation to building size and characteristics.

AD-3000745-01

- **I** The value of the seasonal space heating energy efficiency of the preferential space heater, expressed in %.
- **II** The factor for weighting the heat output of preferential and supplementary heaters of a package as set out in the following table.
- **III** The value of the mathematical expression: 294/(11 · Prated), whereby "Prated" is related to the preferential space heater.

IV The value of the mathematical expression 115/(11 · Prated), whereby "Prated" is related to the preferential space heater.

V The value of the difference between the seasonal space heating energy efficiencies under average and colder climate conditions, expressed in %.

VI The value of the difference between the seasonal space heating energy efficiencies under warmer and average climate conditions, expressed in %.

Tab.97 Weighting of medium temperature heat pumps

Prated / (Prated + Psup)(1)(2)	II, package without hot water storage tank	II, package with hot water storage tank
0	1.00	1.00
0.1	0.70	0.63
0.2	0.45	0.30
0.3	0.25	0.15
0.4	0.15	0.06
0.5	0.05	0.02
0.6	0.02	0
≥ 0.7	0	0

(1) The intermediate values are calculated by linear interpolation between the two adjacent values.
(2) Prated is related to the preferential space heater or combination heater.

Tab.98 Package efficiency (temperature regulator + heat pump)

		MONO AWHP 6 MR	MONO AWHP 8 MR	MONO AWHP 8 TR	MONO AWHP 11 TR
HMI-RMA	%	134	141	141	136

See also
Compatible heating devices, page 14

16.5.4 Package fiche - Combination heaters (boilers or heat pumps)

Fig.133 Package fiche for combination heaters (boilers or heat pumps) indicating the water heating energy efficiency of the package

Water heating energy efficiency of combination heater

(1) ‘I’ %

Declared load profile: ☐

Solar contribution

from fiche of solar device

Auxiliary electricity

(1.1 x ‘I’ - 10%) x ‘II’ - ‘III’ - ‘I’ = + (2) ☐ %

Water heating energy efficiency of package under average climate

(3) ☐ %

Water heating energy efficiency class of package under average climate

		G	F	E	D	C	B	A	A+	A++	A+++
☐	M	<27%	≥27%	≥30%	≥33%	≥36%	≥39%	≥65%	≥100%	≥130%	≥163%
☐	L	<27%	≥27%	≥30%	≥34%	≥37%	≥50%	≥75%	≥115%	≥150%	≥188%
☐	XL	<27%	≥27%	≥30%	≥35%	≥38%	≥55%	≥80%	≥123%	≥160%	≥200%
☐	XXL	<28%	≥28%	≥32%	≥36%	≥40%	≥60%	≥85%	≥131%	≥170%	≥213%

Water heating energy efficiency under colder and warmer climate conditions

Colder: (3) ☐ **- 0.2 x** (2) ☐ **=** ☐ **%**

Warmer: (3) ☐ **+ 0.4 x** (2) ☐ **=** ☐ **%**

The energy efficiency of the package of products provided for in this fiche may not correspond to its actual energy efficiency once installed in a building, as this efficiency is influenced by further factors such as heat loss in the distribution system and the dimensioning of the products in relation to building size and characteristics.

AD-3000747-01

I The value of the water heating energy efficiency of the combination heater, expressed in %.

II The value of the mathematical expression $(220 \cdot Q_{ref})/Q_{nonsol}$, where Q_{ref} is taken from Regulation EU 811/2013, Annex VII Table 15 and Q_{nonsol} from the product fiche of the solar device for the declared load profile M, L, XL or XXL of the combination heater.

III The value of the mathematical expression $(Q_{aux} \cdot 2{,}5)/(220 \cdot Q_{ref})$, expressed in %, where Q_{aux} is taken from the product fiche of the solar device and Q_{ref} from Regulation EU 811/2013, Annex VII Table 15 for the declared load profile M, L, XL or XXL.

© Copyright

All technical and technological information contained in these technical instructions, as well as any drawings and technical descriptions supplied, remain our property and shall not be multiplied without our prior consent in writing. Subject to alterations.

remeha

NL	**Remeha B.V.** Marchantstraat 55 7332 AZ Apeldoorn P.O. Box 32 7300 AA Apeldoorn	**T** +31 (0)55 549 6969 **F** +31 (0)55 549 6496 **E** remeha@remeha.nl
AT	**Walter Bösch K.G.** Industrie Nord 6890 Lustenau	**T** +43 5577 81310 **F** +43 5577 8131250 **E** info@boesch.at
BE	**Remeha nv** Koralenhoeve 10 B-2160 Wommelgem	**T** +32 (0) 3 230 71 60 **F** +32 (0) 3 354 54 30 **E** info@remeha.be
BE	**Thema S.A.** Zone Industrielle d'Awans Rue de la Chaudronnerie, 2 B-4340 Awans	**T** +32 (0) 4 246 95 75 **F** +32 (0) 4 246 95 76 **E** info@thema-sa.be
CH	**Cipag S.A.** Zone Industrielle 1070 Puidoux-Gare	**T** +41 21 9266666 **F** +41 21 9266633 **E** contact@cipag.ch
CZ	**Bergen s.r.o.** Karlická 9/37 153 00 Praha 5 - Radotín	**T** +420 257 912 060 **F** +420 257 912 061 **E** info@bergen.cz
DE	**Remeha GmbH** Rheiner Strasse 151 48282 Emsdetten	**T** +49 25572 9161 - 0 **F** +49 25572 9161 - 102 **E** info@remeha.de
DK	**Scanboiler Varmeteknik A/S** Vangvedvænget 1 8600 Silkeborg	**T** +45 86 82 63 55 **E** info@scanboiler.dk
ES	**Ecotherm Energy S.L.** Berreteaga Bidea 19 48180 Loiu	**T** +34 94 471 03 33 **F** +34 94 471 11 52 **E** info@remeha.es
FI	**EST Systems Oy** Kujamatintie 16 48720 Kotka	**T** +358 50 554 3068 **E** toimisto@estsystems.fi
HR	**Energy Net d.o.o.** A.K. Miošića 22a 43000 Bjelovar	**T** +385 95 21 21 888 **E** info@energynet.hr
HU	**Marketbau - Remeha Kft.** Gyár u. 2. 2040 Budaors	**T** +36 23 503 980 **F** +36 23 503 981 **E** remeha@remeha.hu
IE	**Euro Gas Ltd.** Unit 38, Southern Cross Business Park Wicklow	**T** +353 12868244 **F** +353 12861729 **E** sales@eurogas.ie
IT	**Revis S.r.l.** Via del Commercio 7 31043 Fontanelle (TV)	**T** +39 0438 466 311 **E** info@re-vis.it
RO	**Remeha S.R.L.** Str. Padin, Nr. 9-13 Scara 5, Ap 53, Judejul Cluj Cluj-Napoca	**T** +40 74 6170 515 **F** +40 26 4421 175 **E** remeha@remehacazan.ro
RS	**Green Building** Temerinska 57 21000 Novi Sad	**T** +381 21 47 70 888 **F** +381 21 47 70 888 **E** info@greenbuilding.rs
TR	**RES Enerji Sistemleri A.S.** Barbaros Bulvari No: 52/2 Besiktas - ISTANBUL	**T** +90 212 356 06 33 **F** +90 212 275 00 62 **E** info@resenerji.com
UK	**Remeha Commercial UK** Innovations House 3 Oaklands Business Centre Oaklands Park RG41 2FD Wokingham	**T** +44 (0)118 978 3434 **F** +44 (0)118 978 6977 **E** boilers@remeha.co.uk

SP OpenTherm®

CE